

NORDcanopy

UV 1.2 Ultraviolet Cleaning System for kitchen canopies

ETS NORD

UV 1.2 Ultraviolet Cleaning System

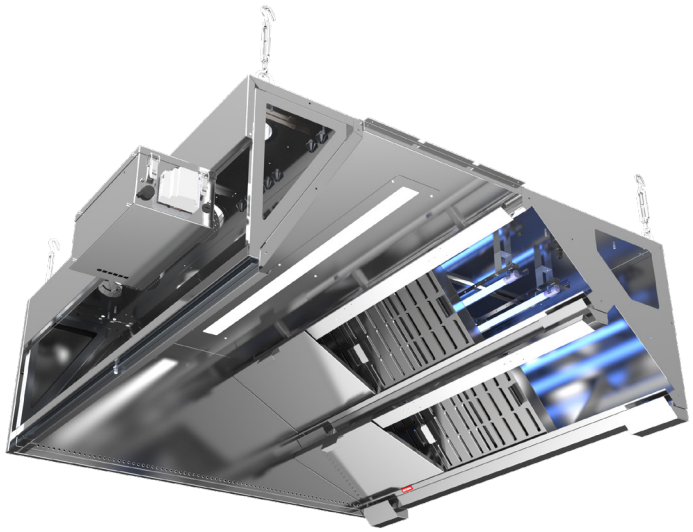

CE

ETS NORD UV cleaning system utilizes ultraviolet light to significantly reduce grease and odor particles from the exhaust chamber and extraction ducts of commercial kitchens. UV cleaning is optionally available with many ETS NORD commercial kitchen canopies.

Benefits obtained with ultraviolet cleaning:

- Effective grease reduction
- Significantly improved fire safety
- Enables the use of heat recovery
- Effectively reduces odors
- Effective at killing bacteria
- Low maintenance costs

The UV cleaning system consists of the following components:

- Canopy
- UV lamp
- Integrated Control Unit
- LCD Control Panel
- IoT device*

* Allows to connect the UV cleaning system to the Internet and provides remote monitoring and controlling.

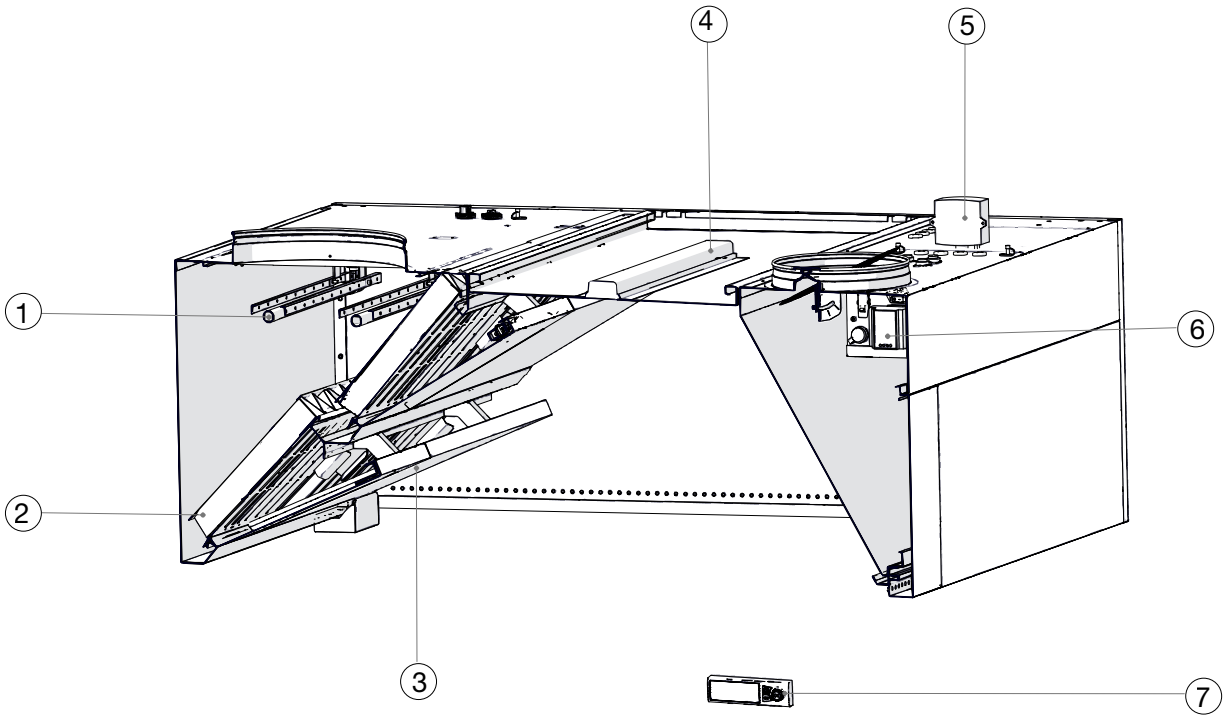

1 – UV Lamp
2 – HFK Grease Filter
3 – UV Shield and safety switch
4 – LED Lighting
5 – Pressure sensor
6 – Integrated Control Unit
7 – LCD Control Panel

1. Function

Extracted air is cleaned in two stages. The HFK grease filters inside ETS NORD canopies have a capture efficiency of 97% for 10µm particles. To further clean the extraction airstream from other contaminants entering the extraction ducts, the UV cleaning system is integrated into the canopy to further eliminate residual particles and improve fire safety.

The removal of grease in the airstream takes place by photolytic oxidation, which is a combination of photolysis and ozonolysis. UV-C lamps are used to generate ultraviolet radiation at both 185 nm and 254 nm wavelengths. At 254 nm the process of photodegradation takes place as a result of the ultraviolet radiation, breaking down organic molecules (in this case grease particles, vapors and bacteria) into minerals and water vapor under the influence of photons. At 185 nm ozone is produced which traverses through the exhaust system, further cleaning the airstream and increasing the overall efficiency of the system. Any residual ozone exiting the system to the outdoors is quickly converted to oxygen and no environmentally harmful compounds whatsoever are generated during the entire process.

Depending on the size of the kitchen canopy, 1-4 UV lamps per canopy are installed, which ensures efficient cleaning of the extracted air.

The operation of the UV lamps is overseen by a Control Unit integrated inside the supply air chamber of the canopy, which can be monitored and controlled with an LCD panel. The Control Units of several UV cleaning systems can be interconnected and controlled from a single LCD panel.

2. UV cleaning system features

Safety:

- The system will shut down if UV shields are removed or not correctly fitted.
- The system will shut down if the pressure in the extraction chamber drops below 20 Pa.
- Electronic parts are protected by thermal protection.
- HACCP International certified for food safety.
- Meets kitchen UV safety requirements.
- CE certified.

Redundancy:

- UV lamps are powered separately, so the failure of one lamp does not affect the others.

Compatibility with building automation:

- Modbus TCP/IP, I/O and LAN connectivity are included as standard.
- Data flow with building automation (BMS) – alarm notification, operating mode, maintenance notification, connection to the ventilation device, fire alarm system compatible.
- Remote monitoring IoT (Internet of Things) from the local area network or Internet.
- Automated time schedule option.

3. Control Units

The choice of UV Control Units depends on the size of canopy and volume of extraction air. Please consult with ETS NORD kitchen specialists when selecting a UV canopy to find a suitable solution.

ETS NORD offers:

- UV-S Control Unit – single-section canopy, max airflow 555 l/s;
- UV-M Control Unit – two-section canopy, max airflow 1110 l/s;
- UV-L Control Unit – multi-sectional canopy, max airflow 2220 l/s.

NB! Control system is integrated into ETS NORD canopies. The UV cleaning system must be installed by a qualified technician and the canopy must be marked accordingly.

The UV-S, UV-M and UV-L Control Units are designed for controlling ETS NORD kitchen ventilation grease canopies with a cleaning system within a UV-C radiation zone.

The control unit comprises power supply for UV lamps and a controller, which enables to control the system via local panel. In addition, the unit is connectable with the building automation and fire alarm system. The operation of the system can be monitored and controlled over the Internet.

UV Control Unit is a flexible solution for all grease canopies of the NORDcanopy range. The unit is installed in the supply air chamber of the canopy and only authorized people have access to the unit. This ensures the protection of the unit against mechanical impacts. The unit is supplied with a plug-in connection and a switch.

There can be maximum of 4 UV control units. Behind one UV-L, UV-M or UV-S master there can be a maximum amount of 3 UV slave control units (does not depend on the type of control unit).

UV-S Control Unit 1.2 is designed for single-section canopies with a maximum airflow of 555 l/s. Its maximum power is 232 W.

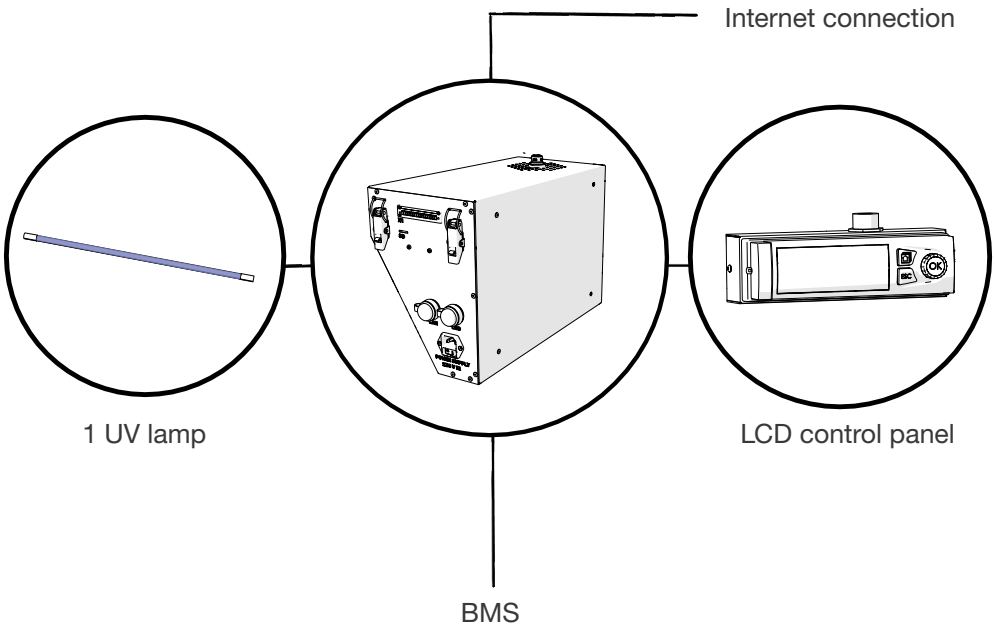

UV-M Control Unit 1.2 is designed for single- and two-section canopies with a maximum airflow of 1110 l/s. Its maximum power is 420 W.

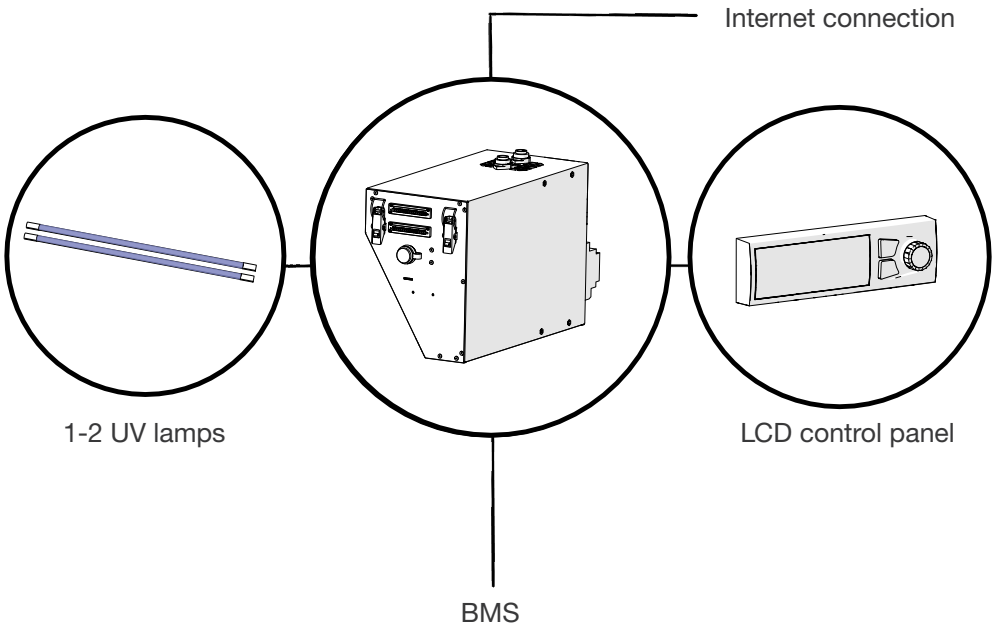

UV-L Control Unit 1.2 is designed for single- and multi-section canopies with a maximum airflow of 2220 l/s. Its maximum power is 910 W.

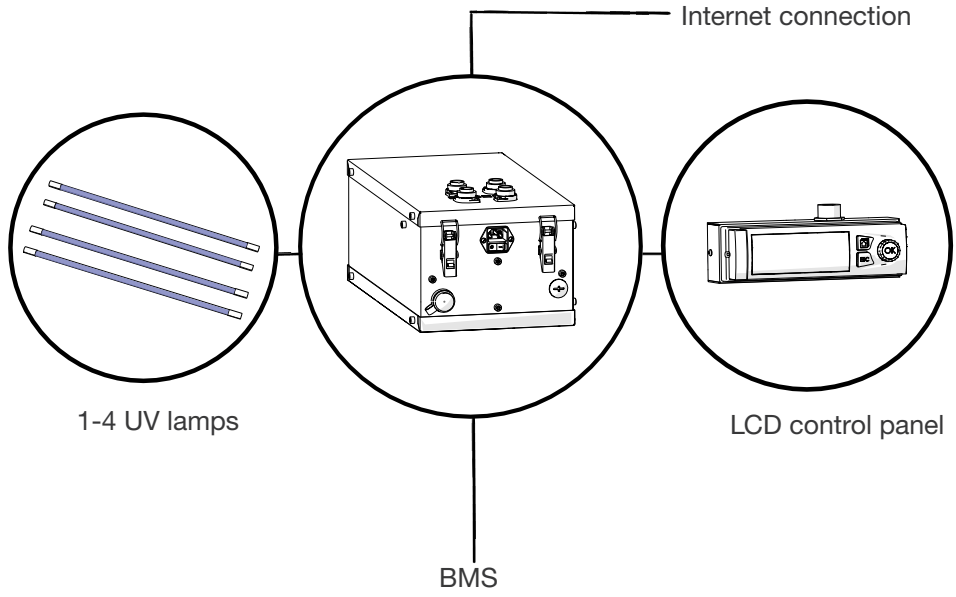

Technical data	UV-S Control Unit 1.2	UV-M Control Unit 1.2	UV-L Control Unit 1.2
Nominal voltage	230 V, AC (TN or TT system)		
Nominal frequency	50/60 Hz		
Max input current of the unit	1,05 A	1,92 A	5,0 A
Short-circuit current withstand capability (Icc; C16 circuit breaker on the supply side)	2 kA		
Overvoltage category	II		
Protection against electric shock	Basic insulation + switch-off of the automatic power supply		
IP rating of the housing	IP2X		
Pollution degree	I		
Ambient temperature range during operation	0 ... +40 °C		
Ambient temperature range during storage	-20 ... +70 °C		
Relative humidity	max. 90 %RH/+20 °C non-condensing		
Operating altitude above sea level	max. 2000 m		
Power consumption	depending on the power of lamp max. 232 W	depending on the number and power of lamps max. 420 W	depending on the number and power of lamps max. 910 W
Number of lamps to be connected	1	1...2 (single type lamps)	1...4 (single type lamps)
Types of UV lamps to be connected	NIQ 170/90 XL LS or NIQ 200/120 XL LS		
Internet connection	Via IoT device		
Building management system	3 digital signals + COM relay outputs		
Fire alarm connection	1 discrete input (requires a potential-free output)		
Dimensions (height x width x depth)	420x185x280 mm	420x185x280 mm	425x215x170 mm
Unit material	Stainless steel AISI 304, th. 0,8 mm		
Weight	4,93 kg	5,68 kg	6,1 kg
Basic standard	EVS-EN IEC 61439-2:2021		

Technical data	UV-S Control Unit 1.2	UV-M Control Unit 1.2	UV-L Control Unit 1.2
EEC standard	EVS-EN IEC 61000-6-1:2019, EVS-EN IEC 61000-6-8:2020		
LCD control panel IP rating	IP20		
LCD control panel ambient temperature range during operation	0 … +50 °C		

UV lamp technical data	UV 900 mm lamp	UV 1200 mm lamp
Power consumption (ballast not included), W	140	215
Spectral power at 185 nm (ozone-generating), W	13	19
Spectral power at 254 nm (ozone-free), W	50	77
Expected useful life (20% power drop), h	10000	10000
Permitted number of ignitions during lifespan	20000	20000
Exhaust air chamber maximum air temperature, °C	90	90
Maximum permitted airflow per UV lamp, l/s	415	555

The number of UV lamps depends on the maximum air flow and the number of saddles. For larger air flows, control units are combined as necessary.

4. Maintenance

The lamp has a lifespan of 20 000 switching cycles and after 10 000 operating hours the intensity of the lamps decreases 20% at 185 nm, therefore it is advised to change all UV lamps in the system after that time. UV lamps are hazardous waste that must be disposed of according to 2012/19/EU WEEE Directive.

The lamps should be inspected once a week, and if dirt is visible, wipe the glass surface of the lamp gently with a damp cloth. For more heavily soiled lamps, use isopropyl alcohol.

ETS NORD offers customers a maintenance service, during which the system's operation is monitored, and the customer is notified of any malfunctions. If the customer has signed a maintenance contract, ETS NORD also performs lamp replacements.

5. LED Notification Panel (an accessory)



The LED notification panel is designed to visually convey the status of the UV cleaning system.

The device can be installed in a kitchen, either on the canopy or on the wall, where it will be easily visible to the user.

The notification panel displays to the user whether the UV system:

- is working;
- has system errors;
- service interval is full: the system must be serviced.

In case of critical errors and maintenance, contact ETS NORD service:

https://www.etsnord.com/contact-info/service/

LED notification panel dimensions

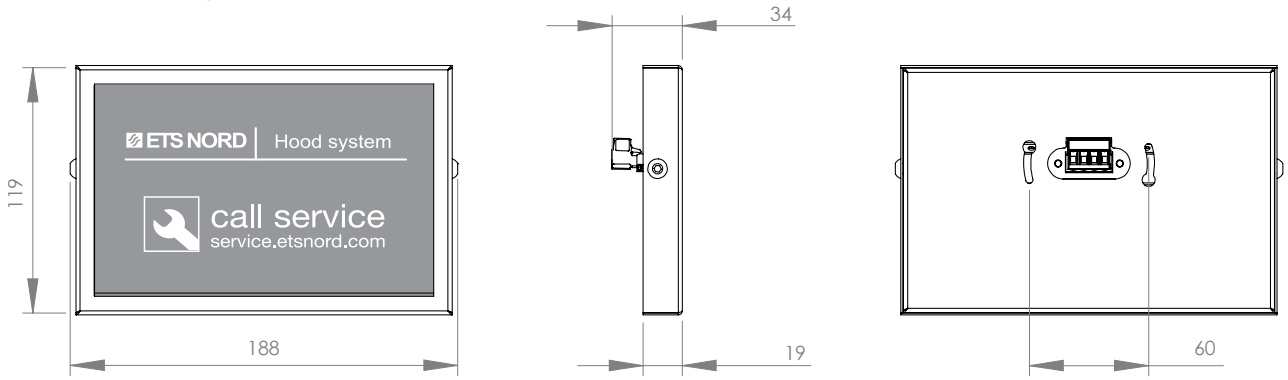

ETS NORD AS

Address: Peterburi tee 53
11415 Tallinn
Estonia

Phone: +372 680 7365
info@etsnord.ee
www.etsnord.ee

ETS NORD Finland

Address: Pakkasraitti 4
04360 Tuusula
Finland

Phone: +358 40 18 42 842
info@etsnord.fi
www.etsnord.fi

ETS NORD Sweden

Address: Järsjögatan 7
69235 Kumla
Sweden

Phone: +46 19 554 20 50
info@etsnord.se
www.etsnord.se

Address: Pinjegatan 5
21363 Malmö
Sweden

Phone: +46 40-94 68 70
info@etsnord.se
www.etsnord.se

ETS NORD International

info@etsnord.com
www.etsnord.com



Let's move the air ***together!***