NORDfire

SEDM-L Smoke Extraction Damper / MULTI

CE certified acc. to EN 12101-8
Tested in accordance with EN 1366-10
Classified acc. to EN 13501-4 + A1
Fire resistance up to EIS 120
Pressure class 2 (vacuum 1000 Pa / overpressure 500 Pa)
Tightness according to EN 1751 via body class C and via damper slat min. class 3
C_{mod} cycling according to EN 12101-8
Certificate of Constancy of Properties No. 1391-CPR2021/0009
Performance declaration No PM/SEDM-L/01/22/1

ETS NORD

SEDM-L Smoke Extraction Damper / MULTI

Description

Smoke and heat extraction dampers - multi are closures in the ductwork of smoke extraction devices. In the event of a fire, the smoke and heat removal system open the dampers in the affected section, therefore enabling the extraction fans to remove combustion products and heat from the endangered areas.

The damper slat is controlled by an actuator.

The damper is fire resistant and is designed for systems with automatic or manual activation.

Smoke dampers are intended for use in spaces with multiple fire compartments, which can be connected by a smoke extraction duct tested according to EN 1366-8 or can be installed in the construction of the fire compartment.

The dampers can be supplied with flange(s) or without flange(s), with cover grille(s).

Smoke and heat removal system

installation of the damper into the wall. In normal operation, the SEDM-L dampers remain closed. If necessary, in the event of a fire, the SEDM-L dampers in the affected fire section will open completely so that the smoke can be removed. When the smoke and heat removal dampers are activated, the dampers used for air supply in the affected section open. The dampers used to supply air in the affected fire section are installed at the ground. The dampers are controlled from the central control system on the basis of signals, e.g. from smoke detectors. The use of cables with a certain fire resistance for the supply voltage ensures that the actuator is supplied even in the event of a fire.

Ventilation system

During ventilation, SEDM-L dampers in the smoke and heat extraction system are controlled by a control system, it's possible to fully open, close or continuously control the flow. The SEDM-L dampers, which are used for air supply, remain closed during ventilation.

Damper classification SEDM-L

Construction	Classification
In a solid wall construction and on duct in a solid wall construction, th. 100 mm	**EI 90 (V_{edw} - i ↔ o) S1000C_{mod}HOT 400/30MAmulti***
For duct in a solid wall construction, th. 100 mm	**EI 120 (V_{ed} - i ↔ o) S1000C_{mod}HOT 400/30MAmulti***
In gypsum wall construction and on the duct in gypsum wall construction, th. 100 mm	**EI 120 (V_{edw} - i ↔ o) S1000C_{mod}HOT 400/30MAmulti***
In a stone ceiling or floor structure, thickness 150 mm	**EI 120 (H_{od} - i ↔ o) S1000C_{mod}HOT 400/30MAmulti***

Operating conditions

Trouble-free operation of the dampers is guaranteed under the following conditions:

- maximum air flow speed 12 m/s
- maximum vacuum up to 1000 Pa or overpressure up to 500 Pa

The dampers are designed for environments protected against weather conditions with class 3K5 climatic conditions, without condensation, icing, ice formation, without water and from sources other than rain and with a temperature limit of -30°C to 50°C.

Design

1. SEDM-L Smoke Extraction Damper / MULTI Designs

1.1 Design with actuating mechanism, Design .44 and .54

Belimo actuators are used for dampers:

BLE 24 (BE 24-12), resp. 24 V

BLE 230 (BE 230-12), resp. 230 V

After connection to the power supply voltage, the actuator moves the damper slats to the ”OPEN” position or ”CLOSED” (according to the corresponding connection, see wiring diagram). If the power supply is interrupted, the actuator stops at the current position. The signalling of the ”OPEN” and ”CLOSED” damper slats positions is ensured by two built-in fixed “potential-free” end- limit switches.

The actuator for operating the damper slats is mounted in an insulated cover/box. It is accessible after removing the cover lid. The electrical connection of the actuator is made with a non-flammable cable (or a cable located in the adjoining cable duct), which passes through an opening made in the wall of the insulated cover/box when installing the damper or when connecting the actuator power cable. The cable entry must meet a minimum fire resistance of 30 minutes.

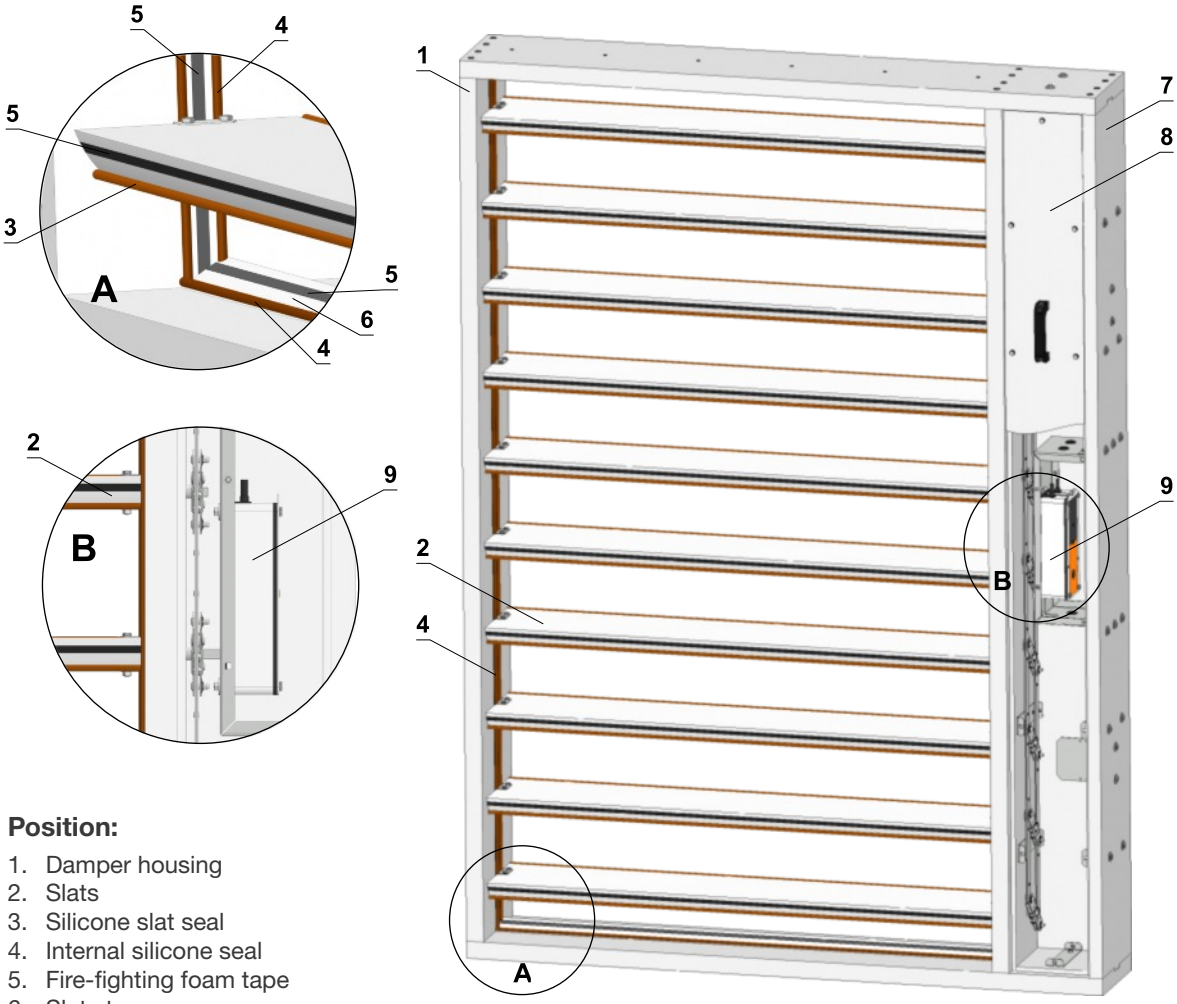

Position:

1. Damper housing
2. Slats
3. Silicone slat seal
4. Internal silicone seal
5. Fire-fighting foam tape
6. Slat stop
7. Actuator housing
8. Actuator housing cover
9. Actuator

Actuator Belimo - 15 Nm	BEN 24(-ST)	BEN 24 SR	BEN 230
Power voltage	AC/DC 24 V 50/60 Hz	AC/DC 24 V 50/60 Hz	AC 230 V 50/60 Hz
Power consumption: - in operation - in the end position	 3 W 0,1 W	 3 W 0,3 W	 4 W 0,4 W
Dimensioning	6 VA (Imax 8,2 A @ 5 ms)	6,5 VA (Imax 8,2 A @ 5 ms)	7 VA (Imax 4 A @ 5 ms)
Protection class	III	III	II
Degree of protection		IP 54	
Adjustment time for 95°		< 30 s	
Ambient temperature Storage temperature		-30°C … +55°C -40°C … +80°C	
Connection - drive - auxiliary switch	 Cabel 1 m, 3 x 0,75 mm² Cabel 1 m, 6 x 0,75 mm² (BEN 24-ST) with plug connectors	 Cabel 1 m, 4 x 0,75 mm² Cabel 1 m, 6 x 0,75 mm²	 Cabel 1 m, 3 x 0,75 mm² Cabel 1 m, 6 x 0,75 mm²

Actuator Belimo BEN 24(-ST)

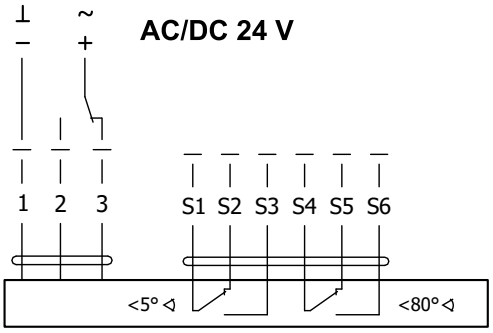

Actuator Belimo BEN 24-SR

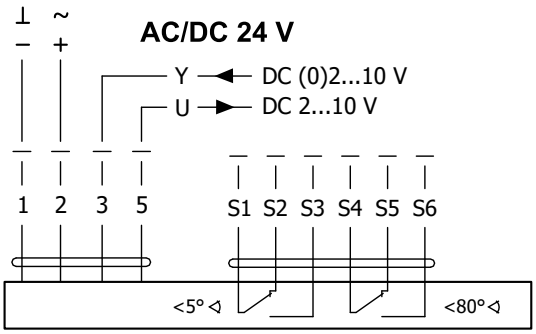

Actuator Belimo BEN 230

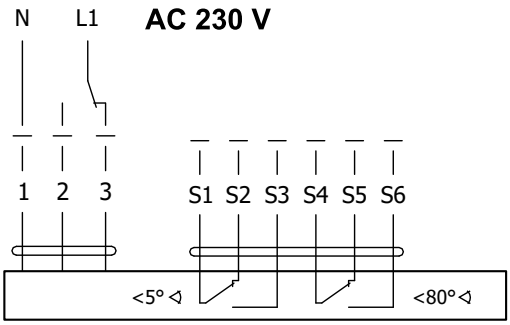

Actuator Belimo - 15 Nm	BEE 24(-ST)	BEE 24 SR	BEE 230
Power voltage	AC/DC 24 V 50/60 Hz	AC/DC 24 V 50/60 Hz	AC 230 V 50/60 Hz
Power consumption: - in operation - in the end position	 2,5 W 0,1 W	 3 W 0,3 W	 3,5 W 0,4 W
Dimensioning	5 VA (Imax 8,2 A @ 5 ms)	5,5 VA (Imax 8,2 A @ 5 ms)	6 VA (Imax 4 A @ 5 ms)
Protection class	III	III	II
Degree of protection		IP 54	
Adjustment time for 95°		< 60 s	
Ambient temperature Storage temperature		-30°C … +55°C -40°C … +80°C	
Connection - drive - auxiliary switch	 Cabel 1 m, 3 x 0,75 mm² Cabel 1 m, 6 x 0,75 mm² (BEE 24-ST) with plug connectors	 Cabel 1 m, 4 x 0,75 mm² Cabel 1 m, 6 x 0,75 mm²	 Cabel 1 m, 3 x 0,75 mm² Cabel 1 m, 6 x 0,75 mm²

Actuator Belimo BEE 24(-ST)

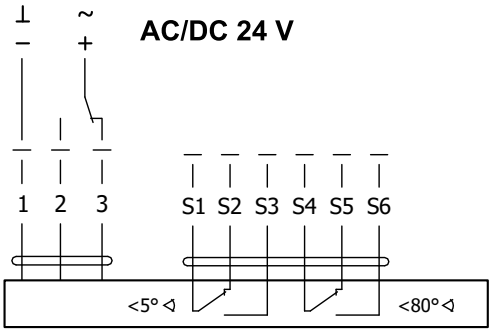

Actuator Belimo BEE 24-SR

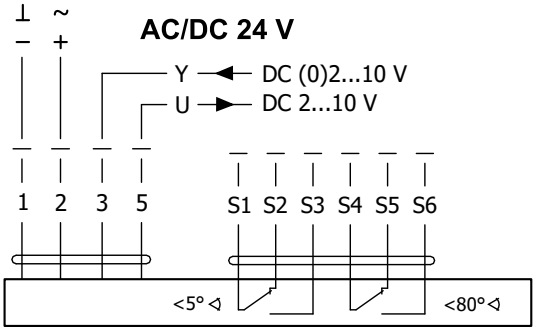

Actuator Belimo BEE 230

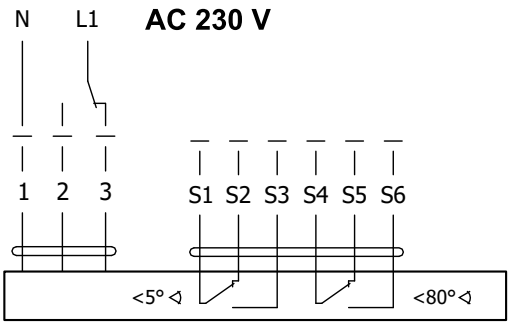

Actuator Belimo - 40 Nm	BE 24-12(-ST)	BE 230-12
Power voltage	AC 24 V 50/60 Hz DC 24 V	AC 230 V 50/60 Hz
Power consumption: - in operation - in the end position	12 W 0,5 W	8 W 0,5 W
Dimensioning	18 VA (Imax 8,2 A @ 5 ms)	15 VA (Imax 7,9 A @ 5 ms)
Protection class	III	II
Degree of protection	IP 54	
Adjustment time for 95°	< 60 s	
Ambient temperature Storage temperature	-30°C … +50°C -40°C … +80°C	
Connection - drive - auxiliary switch	Cabel 1 m, 3 x 0,75 mm_2 Cabel 1 m, 6 x 0,75 mm_2 (BE 24-ST) with plug connectors	

Actuator Belimo BE 24-12(-ST)

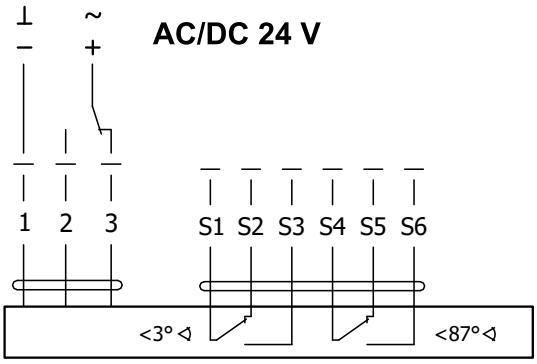

Actuator Belimo BE 230-12

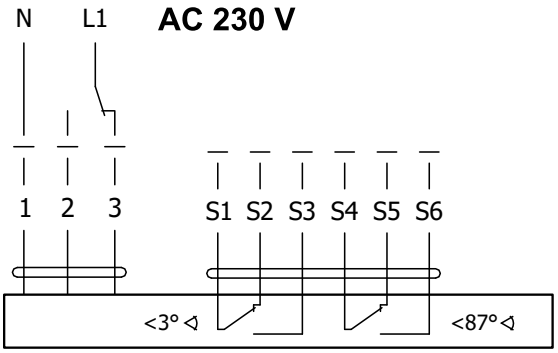

2. Dimensions

Without flange and cover grille

The slat spacing is always 200mm.

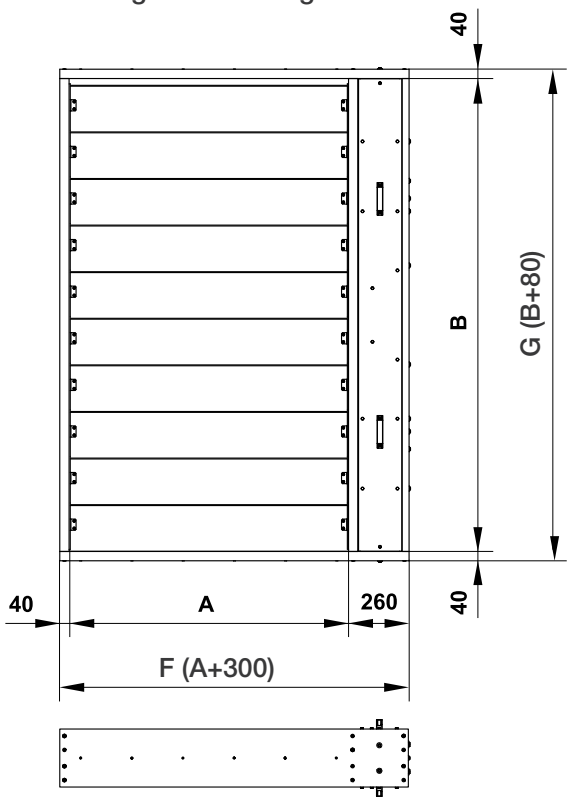

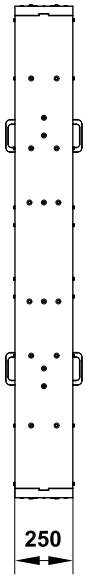

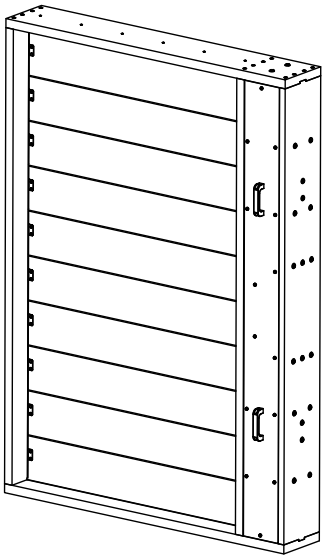

With flange and cover grille over slats

The slat spacing is always 200mm.

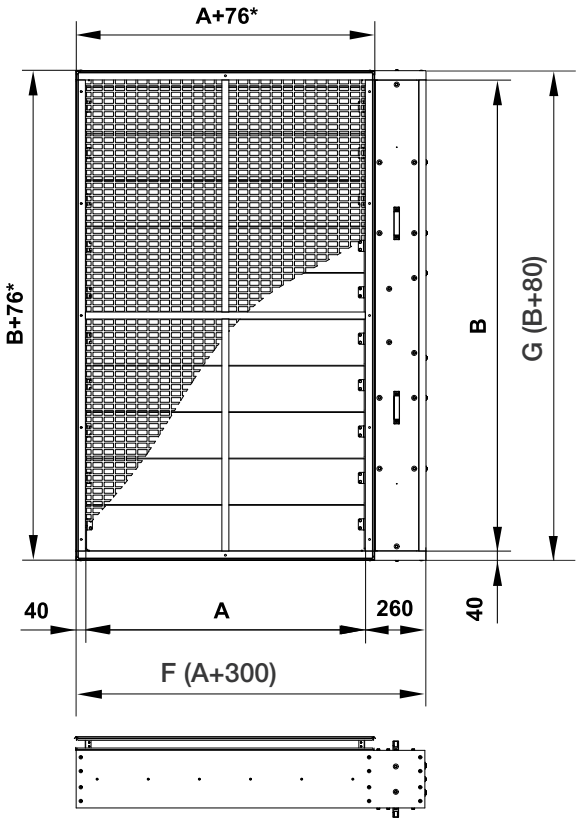

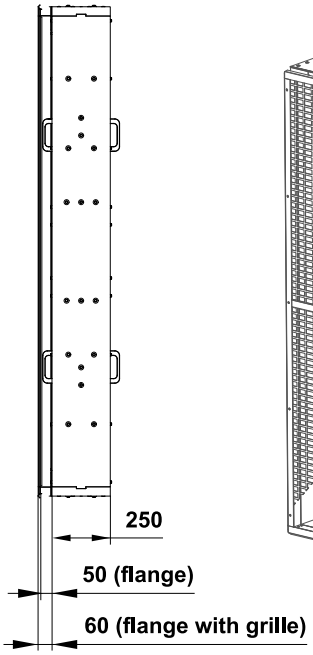

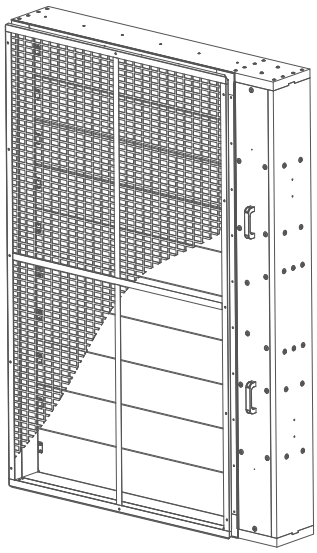

Oval holes in the corners are used to connect the duct.

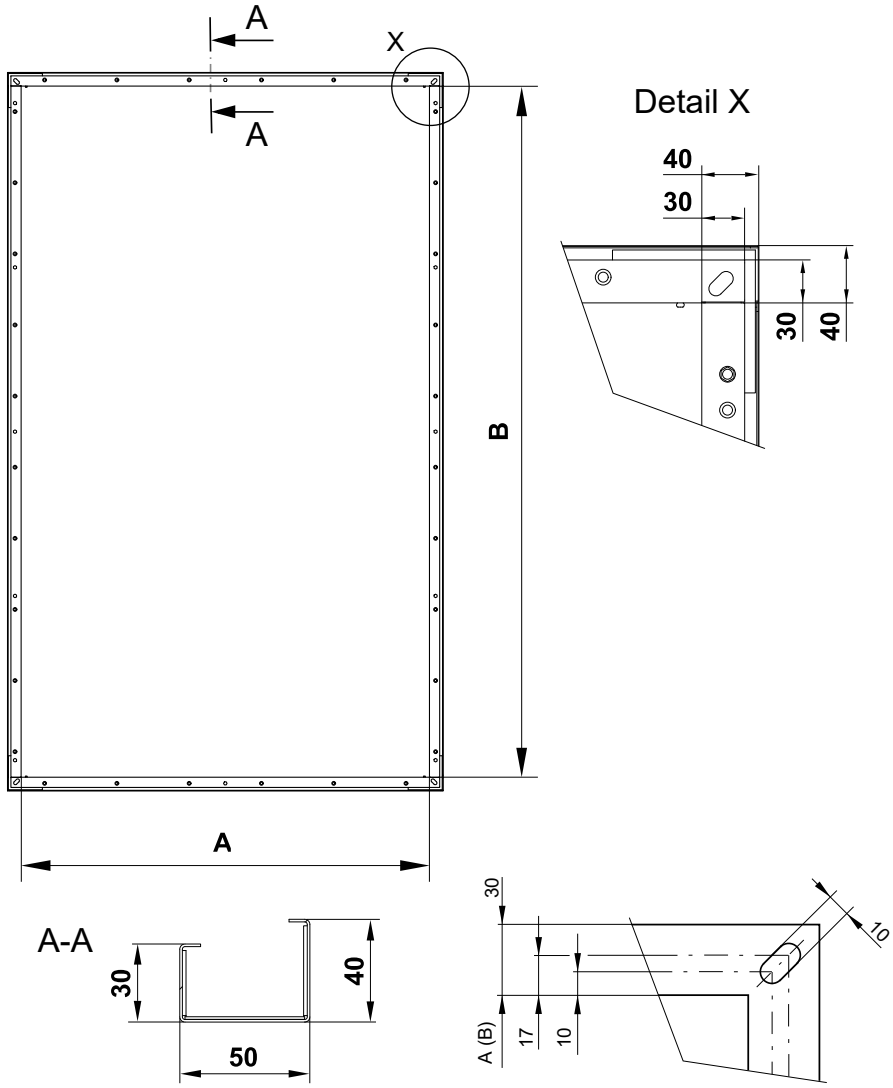

Covering grille KMM

Nominal size A x B (mm)	External size FxG (mm)	Number of slats	Effective area Sef [m²]	Weight SEDM-L [Kg]	Weight flange over slats [Kg]	Weight grille over slats [Kg]	Actuator torque (Nm)
200x430	500x510		0,0537	39,0	1,8	0,9	
250x430	550x510		0,0682	40,7	1,9	1,0	
300x430	600x510		0,0827	42,4	2,0	1,1	
350x430	650x510		0,0972	44,3	2,1	1,2	
400x430	700x510		0,1117	45,9	2,2	1,3	
450x430	750x510		0,1262	47,6	2,3	1,4	
500x430	800x510		0,1407	49,3	2,4	1,5	
550x430	850x510		0,1552	51,0	2,5	1,6	
600x430	900x510		0,1697	52,7	2,6	1,7	
650x430	950x510		0,1842	54,8	2,7	1,8	
700x430	1000x510	2	0,1987	56,5	2,8	1,9	BEN (15 Nm)
750x430	1050x510		0,2132	59,8	2,9	2,0	
800x430	1100x510		0,2277	61,5	2,9	2,1	
850x430	1150x510		0,2422	63,2	3,0	2,2	
900x430	1200x510		0,2567	64,9	3,1	2,3	
950x430	1250x510		0,2712	66,9	3,2	2,4	
1000x430	1300x510		0,2857	68,6	3,4	2,5	
1050x430	1350x510		0,3002	70,3	3,5	2,6	
1100x430	1400x510		0,3147	72,0	3,6	2,7	
1150x430	1450x510		0,3292	73,7	3,7	2,8	
1200x430	1500x510		0,3437	75,4	3,8	3,0	
200x630	500x710		0,0833	50,3	2,2	1,2	
250x630	550x710		0,1058	52,3	2,3	1,3	
300x630	600x710		0,1283	54,4	2,4	1,4	
350x630	650x710		0,1508	56,6	2,5	1,6	
400x630	700x710		0,1733	58,6	2,6	1,7	
450x630	750x710		0,1958	60,7	2,7	1,8	
500x630	800x710		0,2183	62,7	2,8	1,9	
550x630	850x710		0,2408	64,8	2,9	2,0	BEN (15 Nm)
600x630	900x710		0,2633	66,8	3,0	2,2	
650x630	950x710		0,2858	70,9	3,1	2,3	
700x630	1000x710	3	0,3083	72,9	3,2	2,4	
750x630	1050x710		0,3308	74,9	3,3	2,5	
800x630	1100x710		0,3533	77,0	3,3	2,7	
850x630	1150x710		0,3758	79,0	3,4	2,8	
900x630	1200x710		0,3983	81,1	3,5	2,9	
950x630	1250x710		0,4208	83,5	3,6	3,0	
1000x630	1300x710		0,4433	86,7	3,7	3,4	
1050x630	1350x710		0,4658	88,7	3,9	3,5	BEE (25 Nm)
1100x630	1400x710		0,4883	90,8	4,0	3,6	
1150x630	1450x710		0,5108	92,8	4,1	3,8	
1200x630	1500x710		0,5333	94,9	4,2	3,9	
200x830	500x910		0,1129	61,8	2,6	1,5	
250x830	550x910		0,1434	64,2	2,7	1,6	
300x830	600x910		0,1739	66,6	2,8	1,8	
350x830	650x910		0,2044	69,2	2,9	1,9	
400x830	700x910		0,2349	71,6	3,0	2,1	BEN (15 Nm)
450x830	750x910		0,2654	74,0	3,1	2,2	
500x830	800x910		0,2959	76,4	3,2	2,4	
550x830	850x910		0,3264	80,4	3,3	2,5	
600x830	900x910		0,3569	82,8	3,4	2,7	
650x830	950x910		0,3874	85,5	3,5	2,8	
700x830	1000x910	4	0,4179	87,9	3,6	2,9	
750x830	1050x910		0,4484	91,5	3,7	3,1	
800x830	1100x910		0,4789	93,9	3,7	3,2	
850x830	1150x910		0,5094	96,3	3,8	3,4	
900x830	1200x910		0,5399	98,7	3,9	3,5	
950x830	1250x910		0,5704	101,9	4,0	3,7	BEE (25 Nm)
1000x830	1300x910		0,6009	104,3	4,2	4,1	
1050x830	1350x910		0,6314	106,7	4,3	4,3	
1100x830	1400x910		0,6619	109,1	4,4	4,4	
1150x830	1450x910		0,6924	111,5	4,5	4,6	
1200x830	1500x910		0,7229	113,9	4,6	4,7	

Nominal size A x B (mm)	External size FxG (mm)	Number of slats	Effective area Sef [m²]	Weight SEDM-L [Kg]	Weight flange over slats [Kg]	Weight grille over slats [Kg]	Actuator torque (Nm)
200x1030	500x1110		0,1425	74,1	3,0	1,8	
250x1030	550x1110		0,1810	76,8	3,1	1,9	
300x1030	600x1110		0,2195	79,6	3,2	2,1	BEN (15 Nm)
350x1030	650x1110		0,2580	82,6	3,3	2,3	
400x1030	700x1110		0,2965	85,3	3,4	2,4	
450x1030	750x1110		0,3350	89,7	3,5	2,6	
500x1030	800x1110		0,3735	92,4	3,5	3,0	
550x1030	850x1110		0,4120	95,2	3,6	3,2	
600x1030	900x1110		0,4505	99,1	3,7	3,3	
650x1030	950x1110		0,4890	102,4	3,8	3,5	
700x1030	1000x1110	5	0,5275	105,2	3,9	3,7	BEE (25 Nm)
750x1030	1050x1110		0,5660	108,3	4,0	3,9	
800x1030	1100x1110		0,6045	111,1	4,1	4,1	
850x1030	1150x1110		0,6430	113,9	4,2	4,3	
900x1030	1200x1110		0,6815	116,6	4,3	4,5	
950x1030	1250x1110		0,7200	120,0	4,4	4,7	
1000x1030	1300x1110		0,7585	122,7	4,5	5,2	
1050x1030	1350x1110		0,7970	125,5	4,6	5,4	
1100x1030	1400x1110		0,8355	128,2	4,7	5,6	BE (40 Nm)
1150x1030	1450x1110		0,8740	131,0	4,8	5,8	
1200x1030	1500x1110		0,9125	133,8	4,9	6,0	
200x1230	500x1310		0,1721	85,3	3,4	2,1	
250x1230	550x1310		0,2186	88,4	3,5	2,3	BEN (15 Nm)
300x1230	600x1310		0,2651	91,5	3,6	2,4	
350x1230	650x1310		0,3116	94,9	3,7	2,6	
400x1230	700x1310		0,3581	98,0	3,8	2,8	
450x1230	750x1310		0,4046	102,7	3,9	3,2	
500x1230	800x1310		0,4511	107,0	4,0	3,4	
550x1230	850x1310		0,4976	110,1	4,1	3,6	BEE (25 Nm)
600x1230	900x1310		0,5441	113,2	4,2	3,8	
650x1230	950x1310		0,5906	117,3	4,2	4,0	
700x1230	1000x1310	6	0,6371	120,4	4,3	4,2	
750x1230	1050x1310		0,6836	123,5	4,5	4,5	
800x1230	1100x1310		0,7301	126,7	4,5	4,7	
850x1230	1150x1310		0,7766	129,8	4,6	4,9	
900x1230	1200x1310		0,8231	132,9	4,7	5,1	
950x1230	1250x1310		0,8696	136,6	4,8	5,3	
1000x1230	1300x1310		0,9161	139,7	4,9	5,9	BE (40 Nm)
1050x1230	1350x1310		0,9626	142,8	5,0	6,2	
1100x1230	1400x1310		1,0091	145,9	5,1	6,4	
1150x1230	1450x1310		1,0556	149,0	5,3	6,6	
1200x1230	1500x1310		1,1021	152,1	5,4	6,8	
200x1430	500x1510		0,2017	96,7	3,7	2,3	BEN (15 Nm)
250x1430	550x1510		0,2562	100,2	3,8	2,6	
300x1430	600x1510		0,3107	103,6	3,9	2,8	
350x1430	650x1510		0,3652	109,0	4,0	3,1	
400x1430	700x1510		0,4197	112,4	4,1	3,4	
450x1430	750x1510		0,4742	117,0	4,2	3,6	
500x1430	800x1510		0,5287	120,5	4,3	3,8	BEE (25 Nm)
550x1430	850x1510		0,5832	124,4	4,4	4,1	
600x1430	900x1510		0,6377	127,9	4,5	4,3	
650x1430	950x1510		0,6922	132,0	4,6	4,5	
700x1430	1000x1510	7	0,7467	135,4	4,7	4,8	
750x1430	1050x1510		0,8012	138,9	4,8	5,0	
800x1430	1100x1510		0,8557	142,3	4,9	5,2	
850x1430	1150x1510		0,9102	145,8	5,0	5,5	
900x1430	1200x1510		0,9647	149,2	5,1	5,7	
950x1430	1250x1510		1,0192	153,3	5,2	5,9	BE (40 Nm)
1000x1430	1300x1510		1,0737	156,7	5,3	6,7	
1050x1430	1350x1510		1,1282	160,2	5,4	6,9	
1100x1430	1400x1510		1,1827	163,7	5,5	7,1	
1150x1430	1450x1510		1,2372	167,1	5,6	7,4	
1200x1430	1500x1510		1,2917	170,6	5,7	7,6	

Nominal size A x B (mm)	External size FxG (mm)	Number of slats	Effective area Sef [m²]	Weight SEDM-L [Kg]	Weight flange over slats [Kg]	Weight grille over slats [Kg]	Actuator torque (Nm)
200x1630	500x1710		0,2313	108,1	4,2	2,6	
250x1630	550x1710		0,2938	111,9	4,3	2,9	
300x1630	600x1710		0,3563	115,7	4,4	3,1	
350x1630	650x1710		0,4188	121,4	4,4	3,5	
400x1630	700x1710		0,4813	126,4	4,5	3,7	BEE (25 Nm)
450x1630	750x1710		0,5438	130,2	4,7	4,0	
500x1630	800x1710		0,6063	134,0	4,7	4,3	
550x1630	850x1710		0,6688	138,4	4,8	4,5	
600x1630	900x1710		0,7313	142,2	4,9	4,8	
650x1630	950x1710		0,7938	146,6	5,0	5,0	
700x1630	1000x1710	8	0,8563	150,4	5,1	5,3	
750x1630	1050x1710		0,9188	154,2	5,2	5,5	
800x1630	1100x1710		0,9813	158,0	5,3	5,8	
850x1630	1150x1710		1,0438	161,8	5,4	6,1	
900x1630	1200x1710		1,1063	165,6	5,5	6,3	
950x1630	1250x1710		1,1688	170,0	5,6	6,6	BE (40 Nm)
1000x1630	1300x1710		1,2313	173,8	5,7	7,4	
1050x1630	1350x1710		1,2938	177,6	5,8	7,7	
1100x1630	1400x1710		1,3563	181,4	5,9	7,9	
1150x1630	1450x1710		1,4188	185,3	6,0	8,2	
1200x1630	1500x1710		1,4813	189,1	6,1	8,4	
200x1830	500x1910		0,2609	120,2	4,6	2,9	
250x1830	550x1910		0,3314	124,3	4,7	3,2	
300x1830	600x1910		0,4019	128,5	4,8	3,6	
350x1830	650x1910		0,4724	135,8	4,9	3,8	
400x1830	700x1910		0,5429	139,9	5,0	4,1	BEE (25 Nm)
450x1830	750x1910		0,6134	144,1	5,1	4,4	
500x1830	800x1910		0,6839	148,2	5,1	4,7	
550x1830	850x1910		0,7544	153,0	5,3	5,0	
600x1830	900x1910		0,8249	157,2	5,4	5,3	
650x1830	950x1910		0,8954	162,1	5,4	5,5	
700x1830	1000x1910	9	0,9659	166,3	5,5	5,8	
750x1830	1050x1910		1,0364	170,5	5,6	6,1	
800x1830	1100x1910		1,1069	174,6	5,7	6,4	
850x1830	1150x1910		1,1774	178,8	5,8	6,7	
900x1830	1200x1910		1,2479	182,9	5,9	6,9	BE (40 Nm)
950x1830	1250x1910		1,3184	187,9	6,0	7,2	
1000x1830	1300x1910		1,3889	192,1	6,1	8,1	
1050x1830	1350x1910		1,4594	196,2	6,2	8,4	
1100x1830	1400x1910		1,5299	200,4	6,3	8,7	
1150x1830	1450x1910		1,6004	204,5	6,4	9,0	
1200x1830	1500x1910		1,6709	208,7	6,5	9,3	
200x2030	500x2110		0,2905	131,3	4,9	3,2	
250x2030	550x2110		0,3690	135,8	5,0	3,6	
300x2030	600x2110		0,4475	143,1	5,1	3,9	
350x2030	650x2110		0,5260	148,0	5,2	4,2	BEE (25 Nm
400x2030	700x2110		0,6045	152,5	5,3	4,5	
450x2030	750x2110		0,6830	157,0	5,4	4,8	
500x2030	800x2110		0,7615	161,5	5,5	5,1	
550x2030	850x2110		0,8400	166,7	5,6	5,4	
600x2030	900x2110		0,9185	171,2	5,7	5,7	
650x2030	950x2110		0,9970	176,5	5,8	6,0	
700x2030	1000x2110	10	1,0755	181,0	5,9	6,3	
750x2030	1050x2110		1,1540	185,5	6,0	6,6	
800x2030	1100x2110		1,2325	190,0	6,1	7,0	
850x2030	1150x2110		1,3110	194,5	6,2	7,3	BE (40 Nm)
900x2030	1200x2110		1,3895	199,1	6,3	7,6	
950x2030	1250x2110		1,4680	204,4	6,4	7,9	
1000x2030	1300x2110		1,5465	208,9	6,5	8,9	
1050x2030	1350x2110		1,6250	213,4	6,6	9,2	
1100x2030	1400x2110		1,7035	217,9	6,7	9,5	
1150x2030	1450x2110		1,7820	222,4	6,8	9,8	
1200x2030	1500x2110		1,8605	226,9	6,9	10,1	

Mounting the grille on the flange

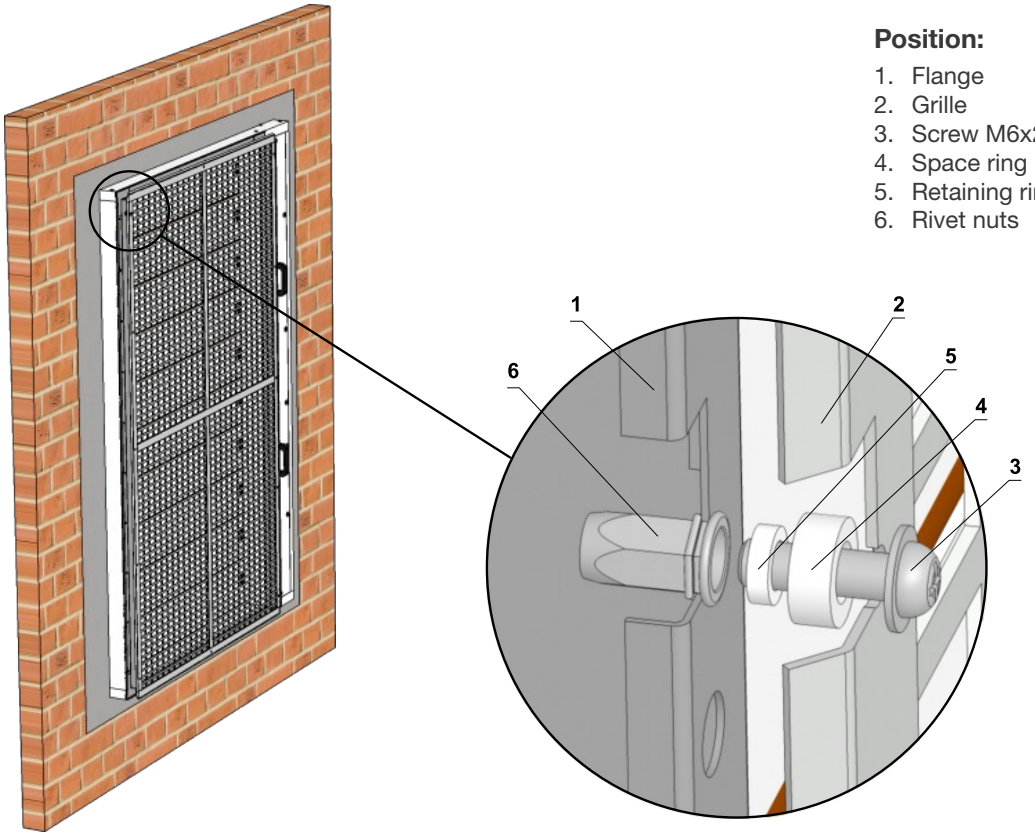

Position:

1. Flange
2. Grille
3. Screw M6x20
4. Space ring
5. Retaining ring
6. Rivet nuts

Mounting the handrail on the damper

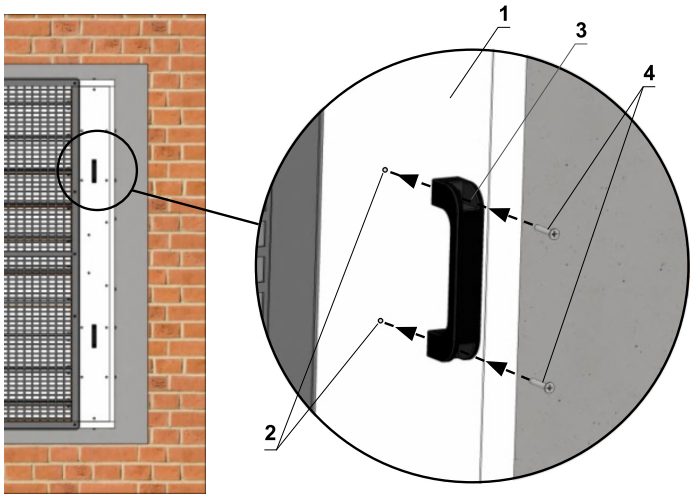

Position:

1. SEDM-L
2. Pre-drilled holes
3. Handrail
4. Screw 5x50

3. Placement and assembly

3.1 Multi-slat smoke and heat dampers - multi SEDM-L

- They're designed for installation in smoke and heat removal duct according to EN1366-8.
- They're suitable for installation in a vertical position, with the slat axis horizontal.
- Dampers and duct must be suspended separately. The connected piping must be suspended in such a way that the transfer of all loads from the adjoining ventilation duct to the damper body is completely excluded. Adjacent duct must be suspended or supported, as required by the duct suppliers.
- Provide the necessary space for access to the control device, it is recommended that other objects be at least 350 mm away from the control parts of the damper.

3.2 Transport to the installation site

- Transport the damper to the installation site in the transport packaging. Pay attention to the appropriate length of the forks of the forklift /handling equipment/ to avoid breaking of wooden planks, consequently damaging the damper´s slats.
- Smaller dimensions can be transported, handled and installed into the mounting hole manually, for dimensions where a handling insert is included in the delivery, it is recommended to use a suitable handling tools and machines, eg. a forklift.

3.3 Damper handling when installed in the mounting hole

1. Place the damper in a vertical position. Do not remove the transport pacers and corners!.

2. Place handling inserts between the top slat and the damper housing.

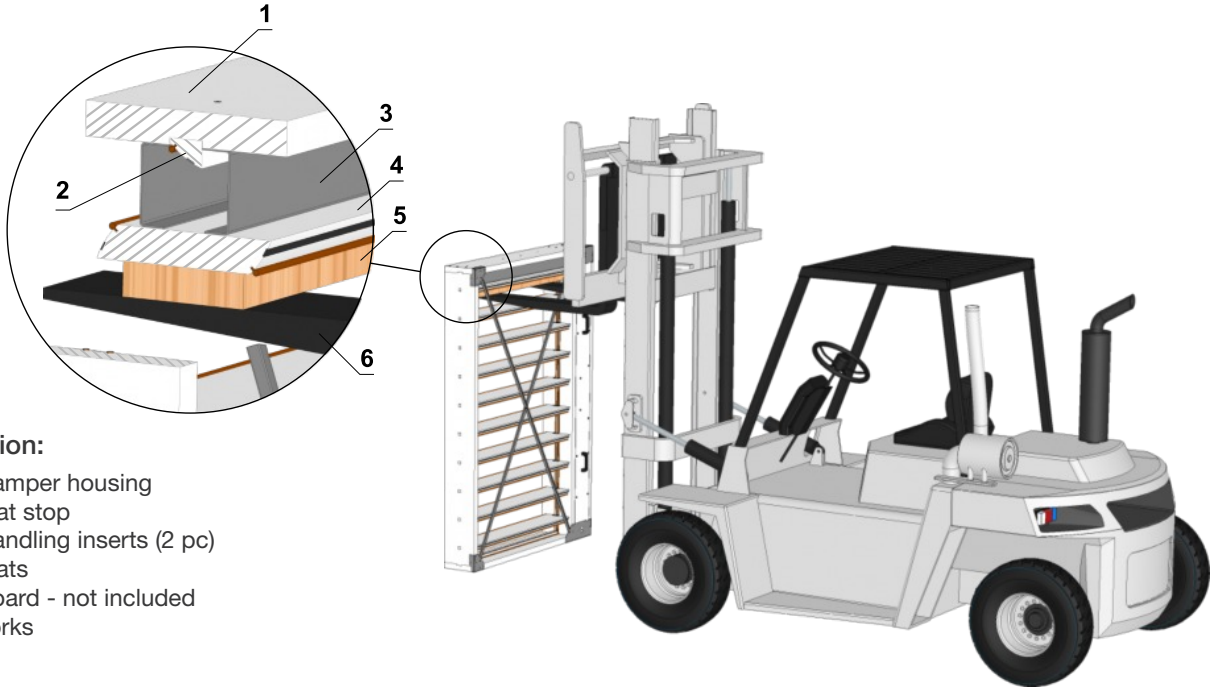

Position:

1. Damper housing
2. Slat stop
3. Handling inserts (2 pc)
4. Slats
5. Board - not included
6. Forks

3. Drive the forklift under the highest slat. It´s necessary to put a board between the slat and the fork along the slat´s entire length so that the slat is not damaged when the damper is raised.

4. Place the damper in the installation hole.

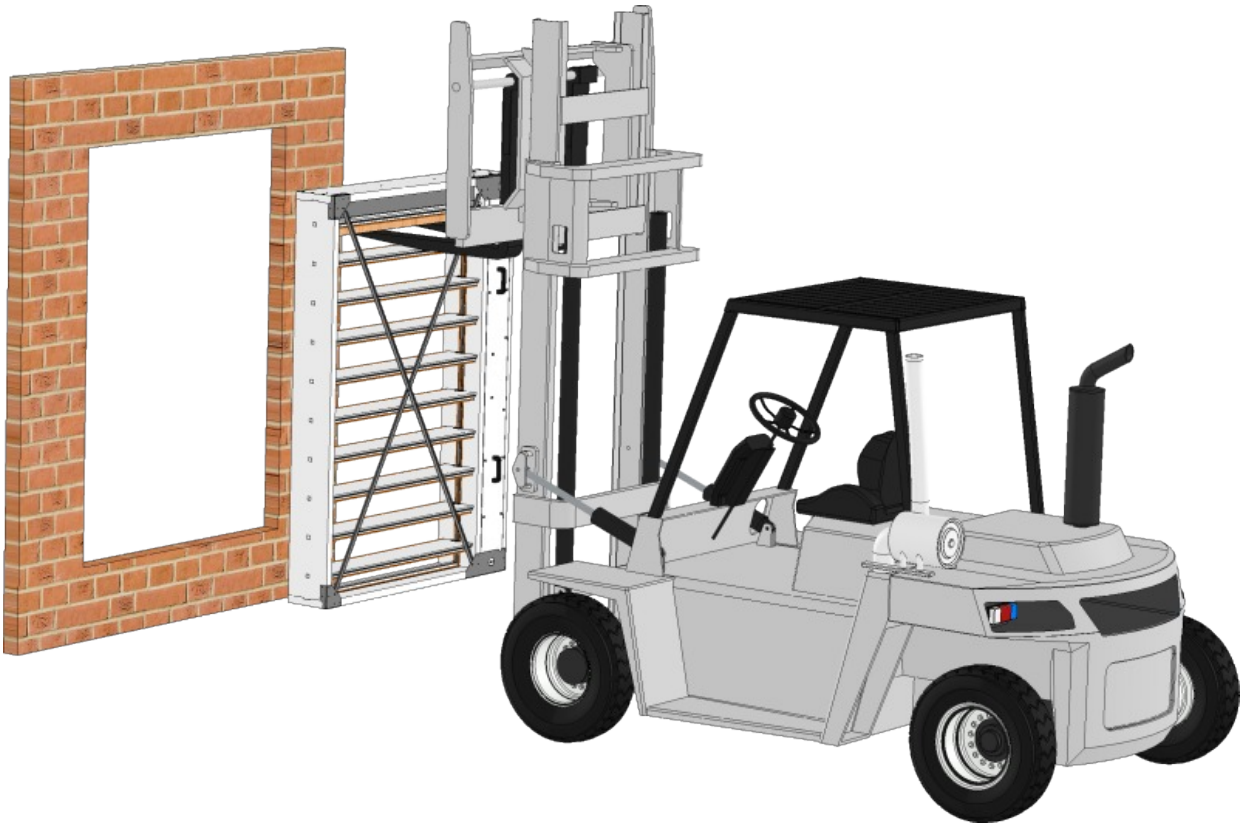

5. After installing the damper and possibly hardening the plaster/mortar, remove the transport struts and corners.

Installation of multiple dampers in a fire diving structure

- Minimum distance 200 mm between dampers installed in one fire dividing structure.
- Distance 75 mm between the damper and the structure (wall/ceiling).
- When installing SEDM-L (smaller dimensions), which is not equipped with transport spacers and corners, the sheets must be in the “CLOSED” position. The damper body must not be deformed during installation.
- After installing the damper, the damper slats must not be opened, or closing on the damper body.

Installation side by side

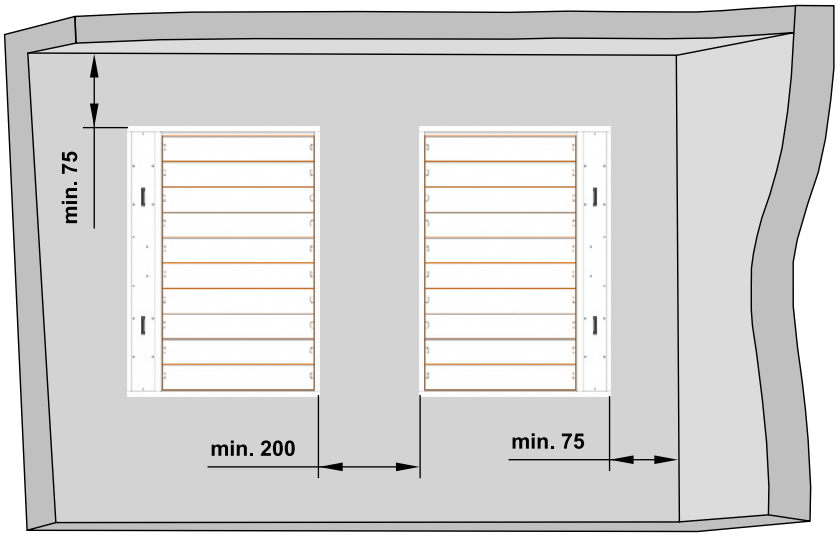

Installation on top of each other

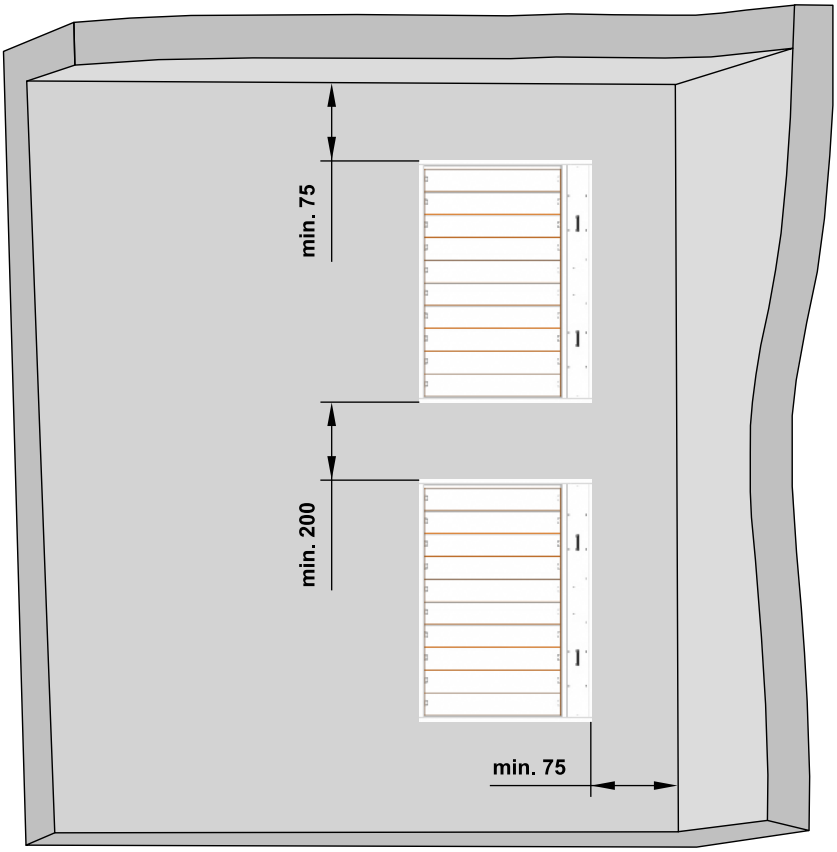

Recommended construction openings

Construction opening – mortar or gypsum

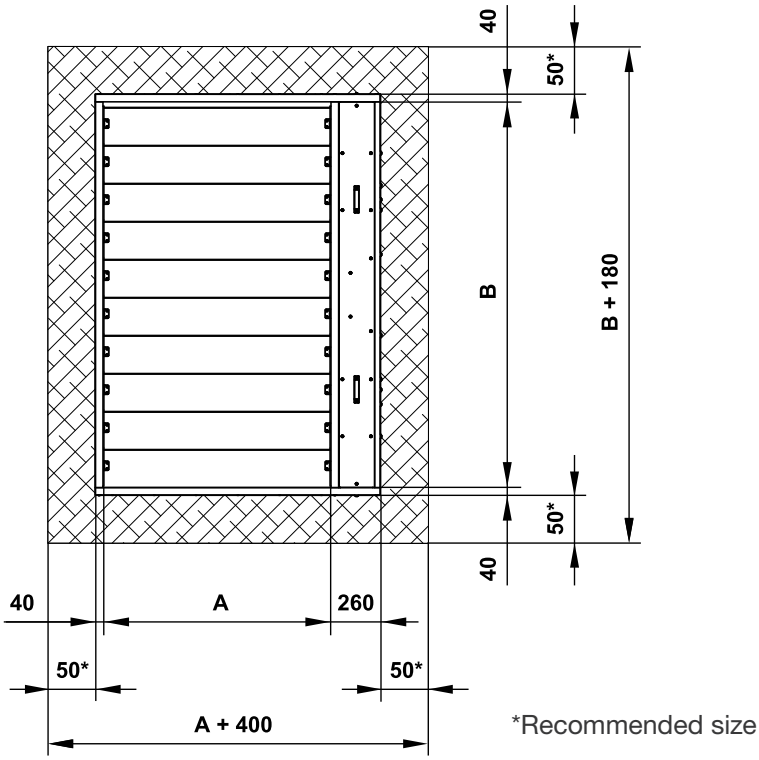

*Recommended size

Construction opening – Weichschott

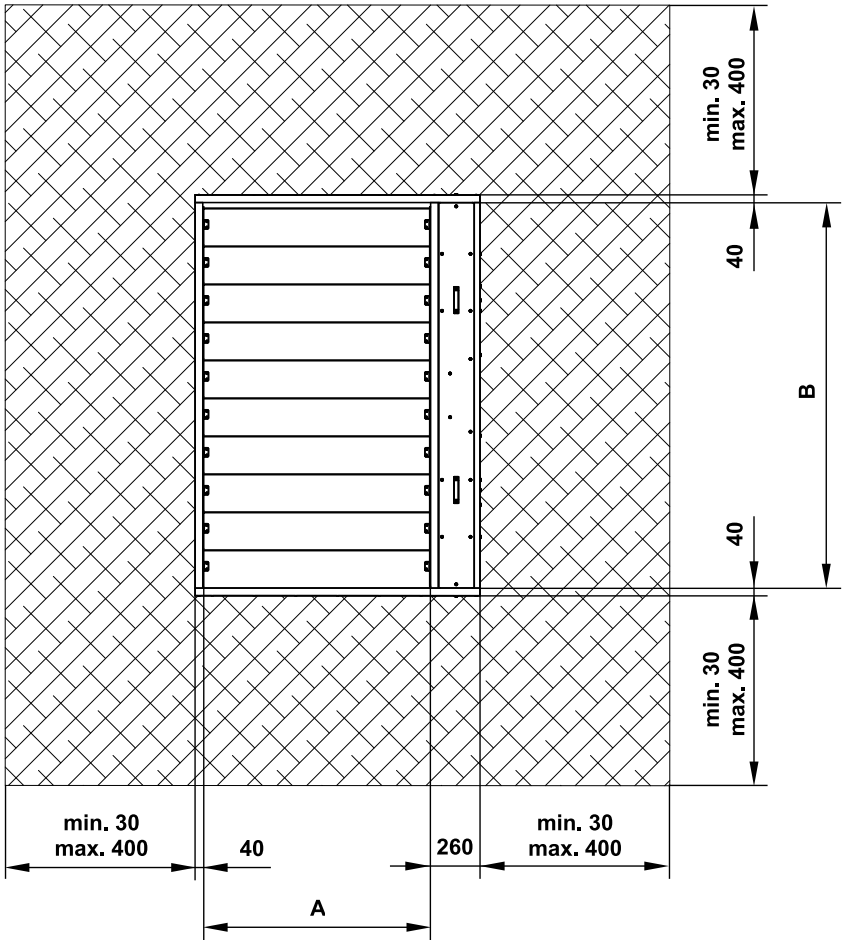

4. Installation methods overview

Fire separating construction	Wall Min. thikness [mm]	Installation	Fire resist.	Page
Solid wall / shaft construction	100	Mortar or gypsum	EIS 90	17
	100	Weichschott	EIS 120	18
Gypsum wall / shaft construction	100	Weichschott /	EIS 120	19
Installation in solid ceiling construction	150	Mortar or gypsum	EIS 120	25

4.1 Instalaltion in solid / shaft wall construction

Mortar or gypsum

EIS 90

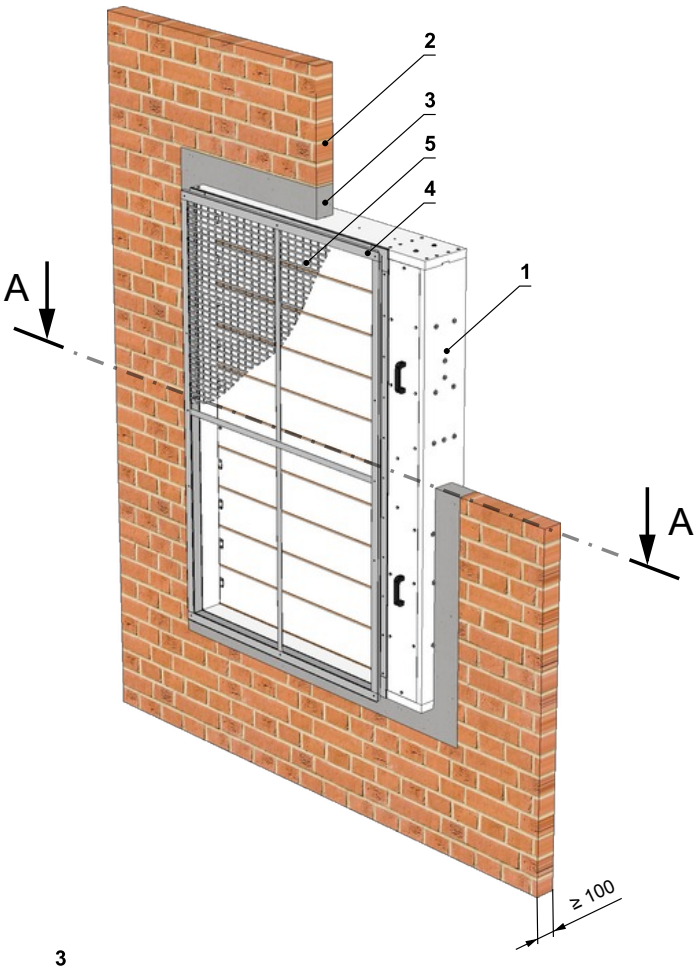

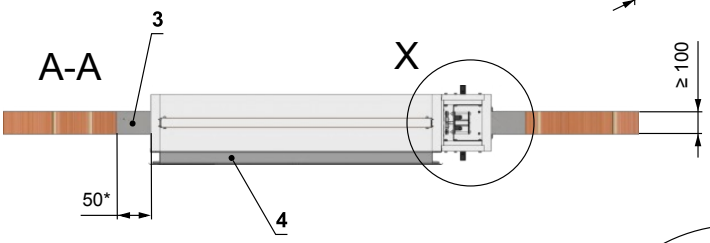

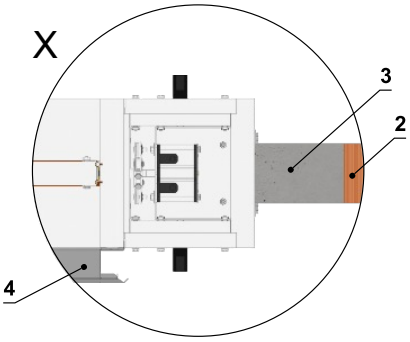

Position:

1. SEDM-L
2. Solid wall / shaft construction
3. Mortar or gypsum
4. Flange
5. Grille

*Recommended size

Weichschott fire board

EIS 120

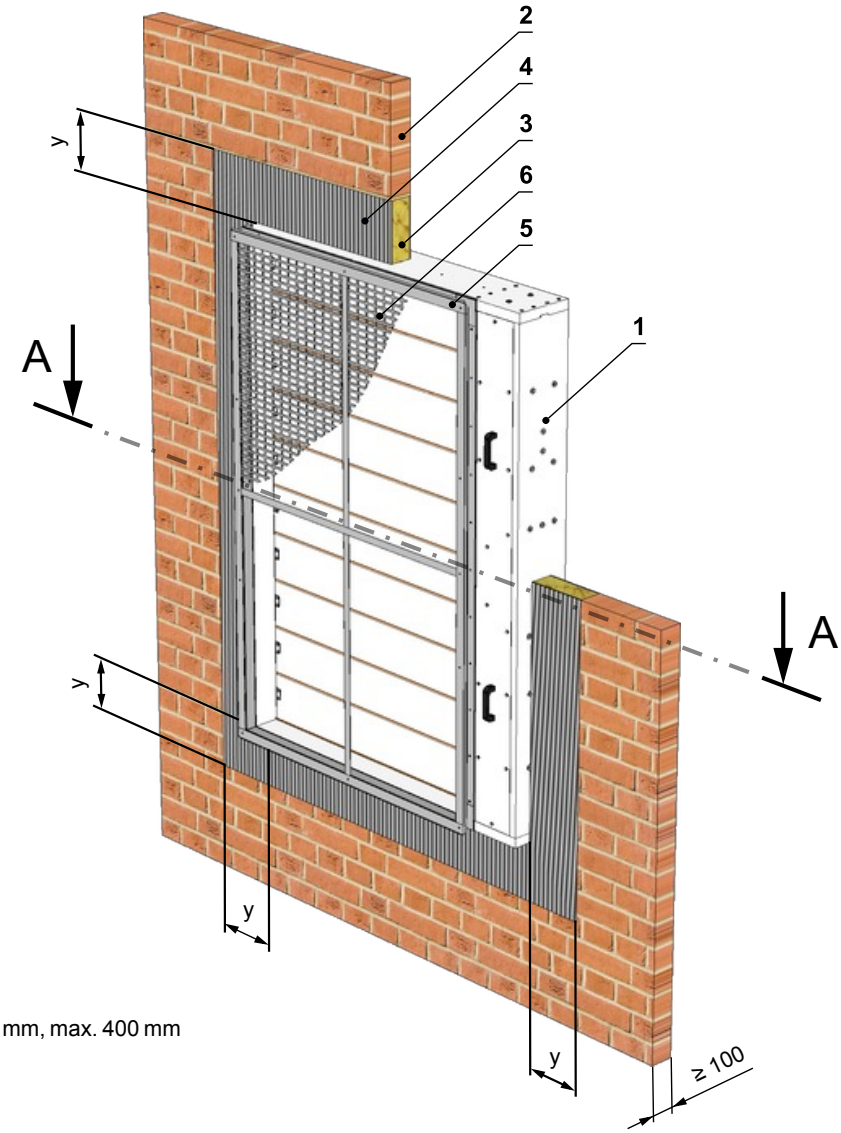

y = min. 30 mm, max. 400 mm

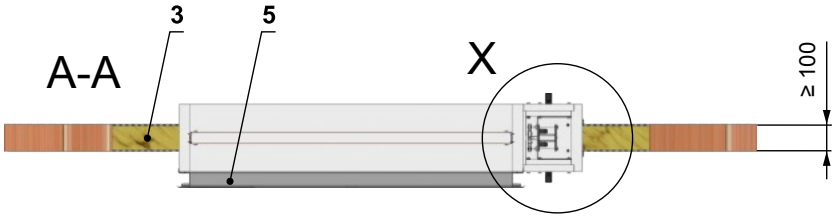

Example of materials used:*

3 Hilti CFS-CT B 1S 140/50

4 Hilti CFS-CT

* Fire resistant insulation and fire resistant board can be replaced by another approved fire sealing system for damper installation with equivalent material properties.

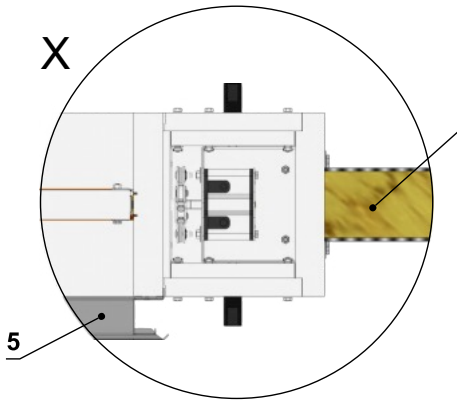

Position:

1. SEDM-L
2. Solid wall / shaft construction
3. Fire board
4. Fire coating th. 1 mm
5. Flange
6. Grille

4.2 Instalaltion in gypsum / shaft wall construction

Weichschott fire board

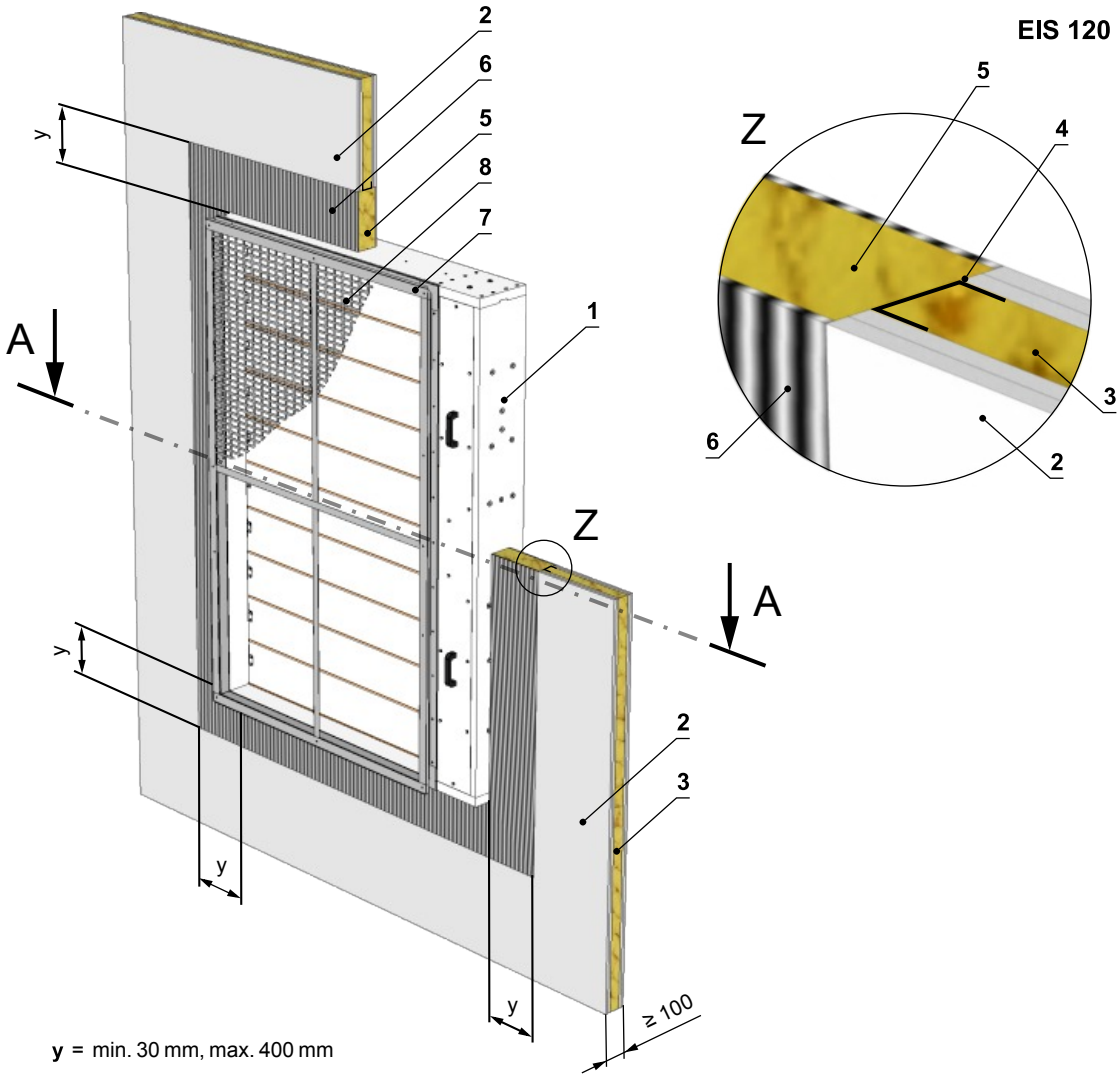

y = min. 30 mm, max. 400 mm

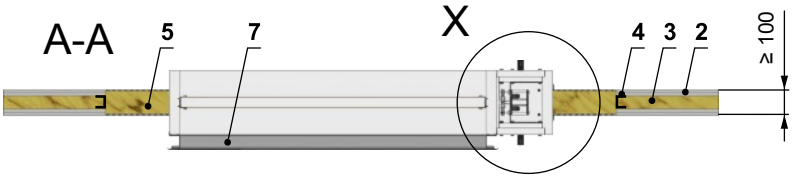

Example of materials used:*

5 Hilti CFS-CT B 1S 140/50

6 Hilti CFS-CT

* Fire resistant insulation and fire resistant board can be replaced by another approved fire sealing system for damper installation with equivalent material properties..

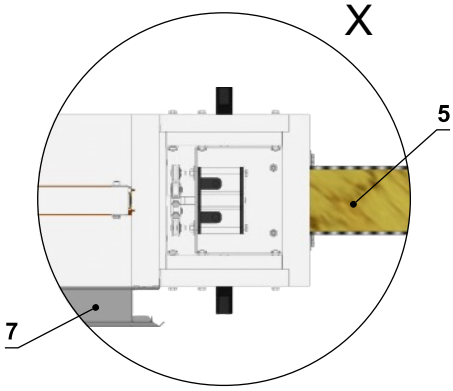

Position:

1. SEDM-L
2. Gypsum wall / shaft construction
3. Mineral wool (type depending on the type of construction)
4. Steel profile for plasterboard constructions
5. Fire board
6. Fire coating th. 1 mm
7. Flange
8. Grille

4.3 Installation in battery

2 dampers side by side - solid- / gypsum wall construction - mortar or gypsum / Weichschott fire board

EIS 90 - solid wall construction - mortar or gypsum
EIS 120 - solid wall construction -fire board
EIS 120 - gypsum wall construction - fire board

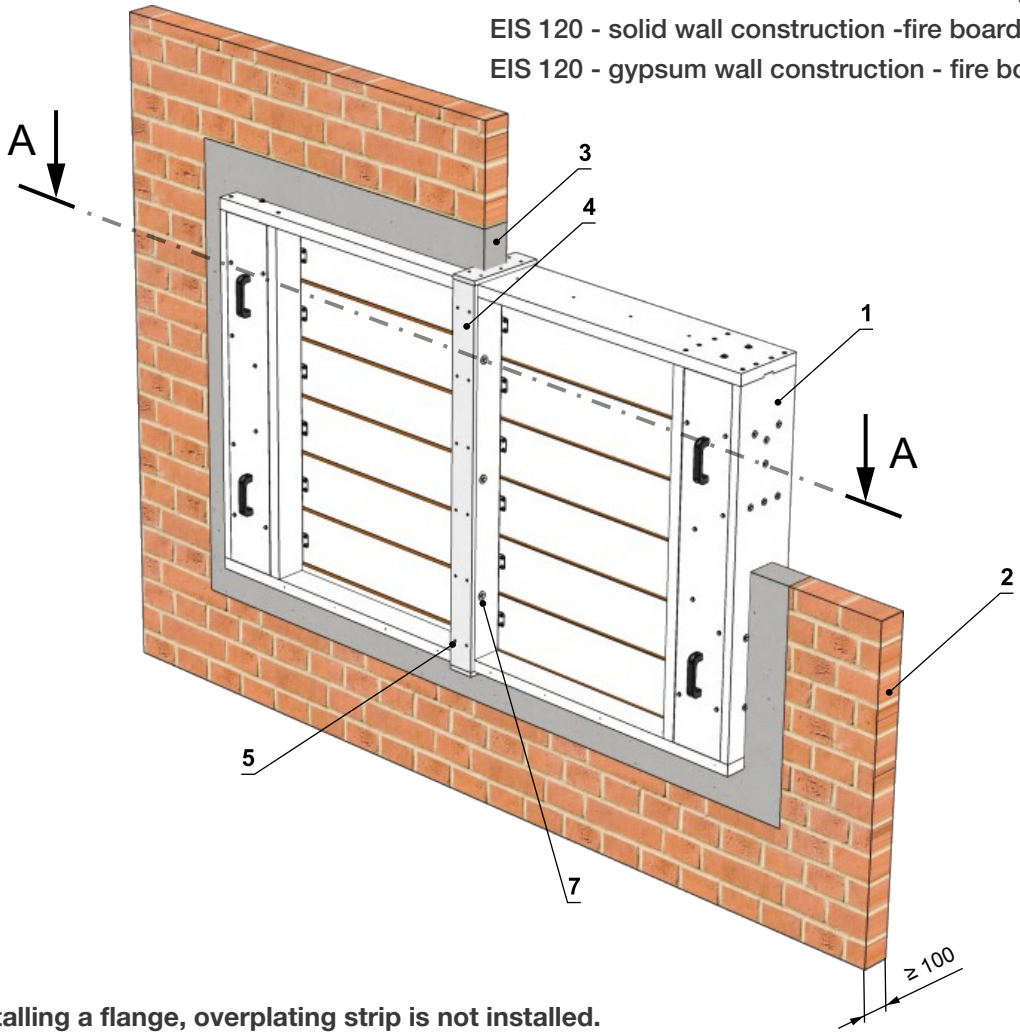

**** When installing a flange, overplating strip is not installed.**

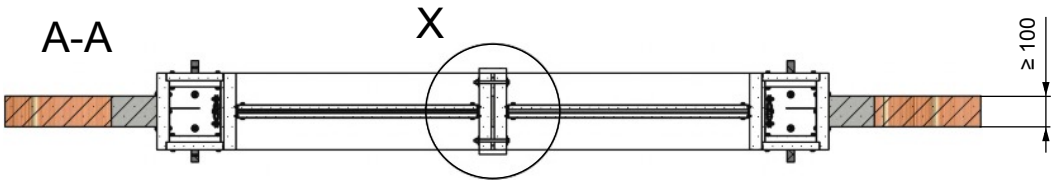

*** Attention!**

Bolts and nuts shall not prevent free rotation on the blades.

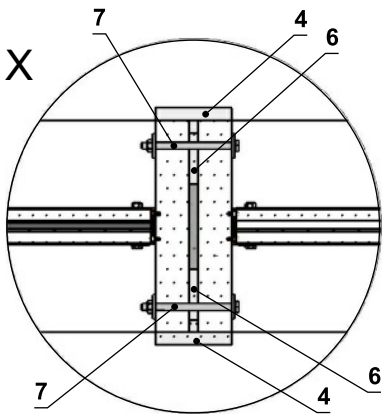

Position:

1. SEDM-L
2. Solid- / gypsum wall construction
3. Mortar or gypsum / Fire board
4. Overplating strip (e.g. Prometect-H, th. 15 mm) **
5. Screw4x40 (span 200 to 250 mm)
6. Spacing strip (e.g. Promatect-H, th. 10 mm, width 40 to 50 mm)
7. M8 bolt assemply (bolt, 2 pcs large washer, nut) *

Connectin straps, spacer straps, screws and screw connections are not included in the delivery!

2 dampers on top of each other - solid- / gypsum wall construction - mortar or gypsum / Weichschott fire board

EIS 90 - solid wall construction - mortar or gypsum
EIS 120 - solid wall construction -fire board
EIS 120 - gypsum wall construction - fire board

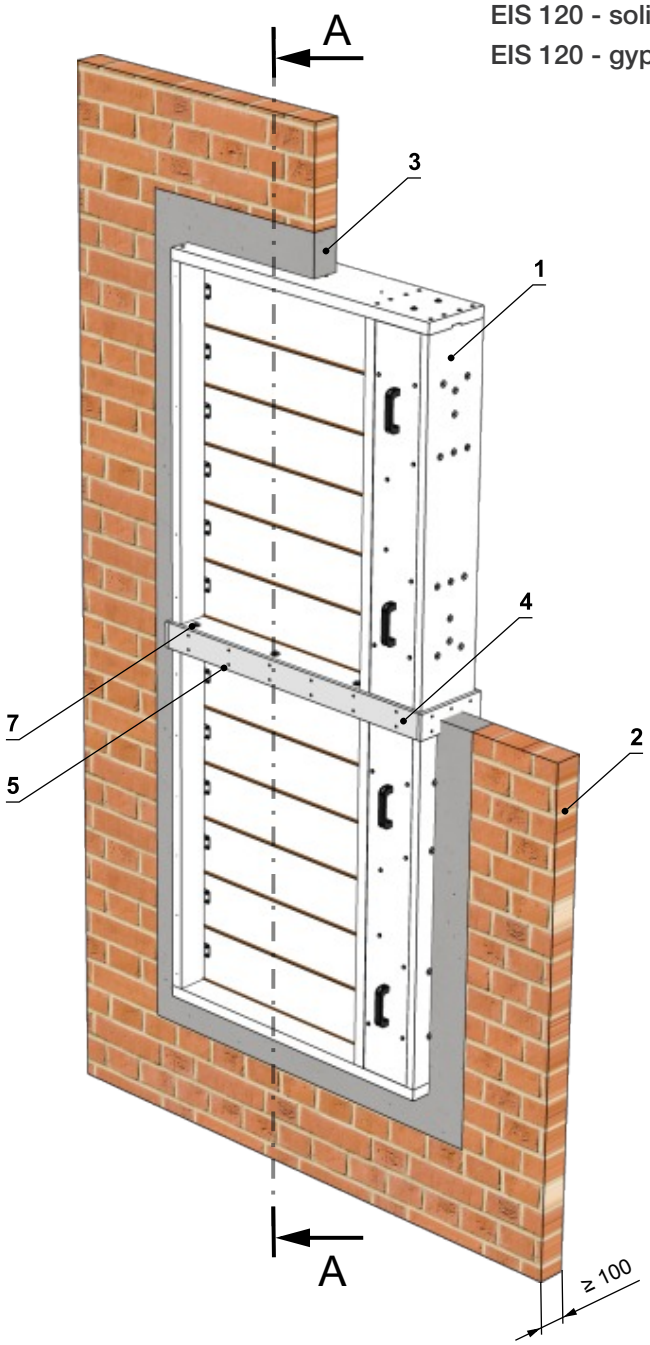

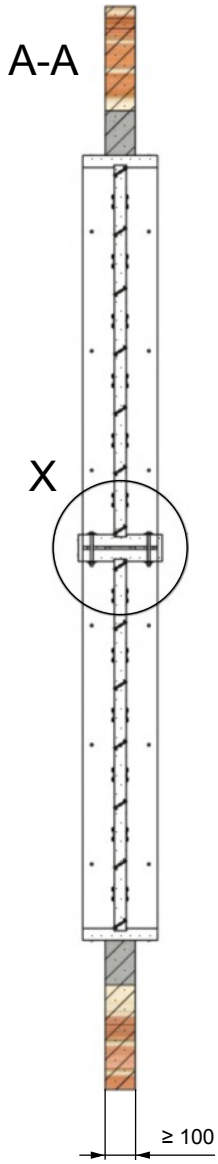

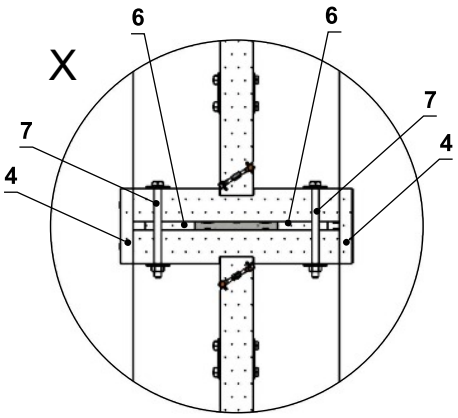

*** When installing a flange, overplating strip is not installed**

Position:

1. SEDM-L
2. Solid- / gypsum wall construction
3. Mortar or gypsum / Fire board
4. Overplating strip (e.g. Promatect-H, th. 15 mm)*
5. Screw 4x40 (span 200 to 250 mm)
6. Spacing strip (e.g. Promatect-H, th. 10 mm, width 40 to 50 mm)
7. M8 bolt assemply (bolt, 2 pcs large washer, nut), span 200 to 300 mm

Connectin straps, spacer straps, screws and screw connections are not included in the delivery!

4 dampers - solid- / gypsum wall construction - mortar or gypsum / Weichschott fire board

EIS 90 - solid wall construction - mortar or gypsum
EIS 120 - solid wall construction -fire board
EIS 120 - gypsum wall construction - fire board

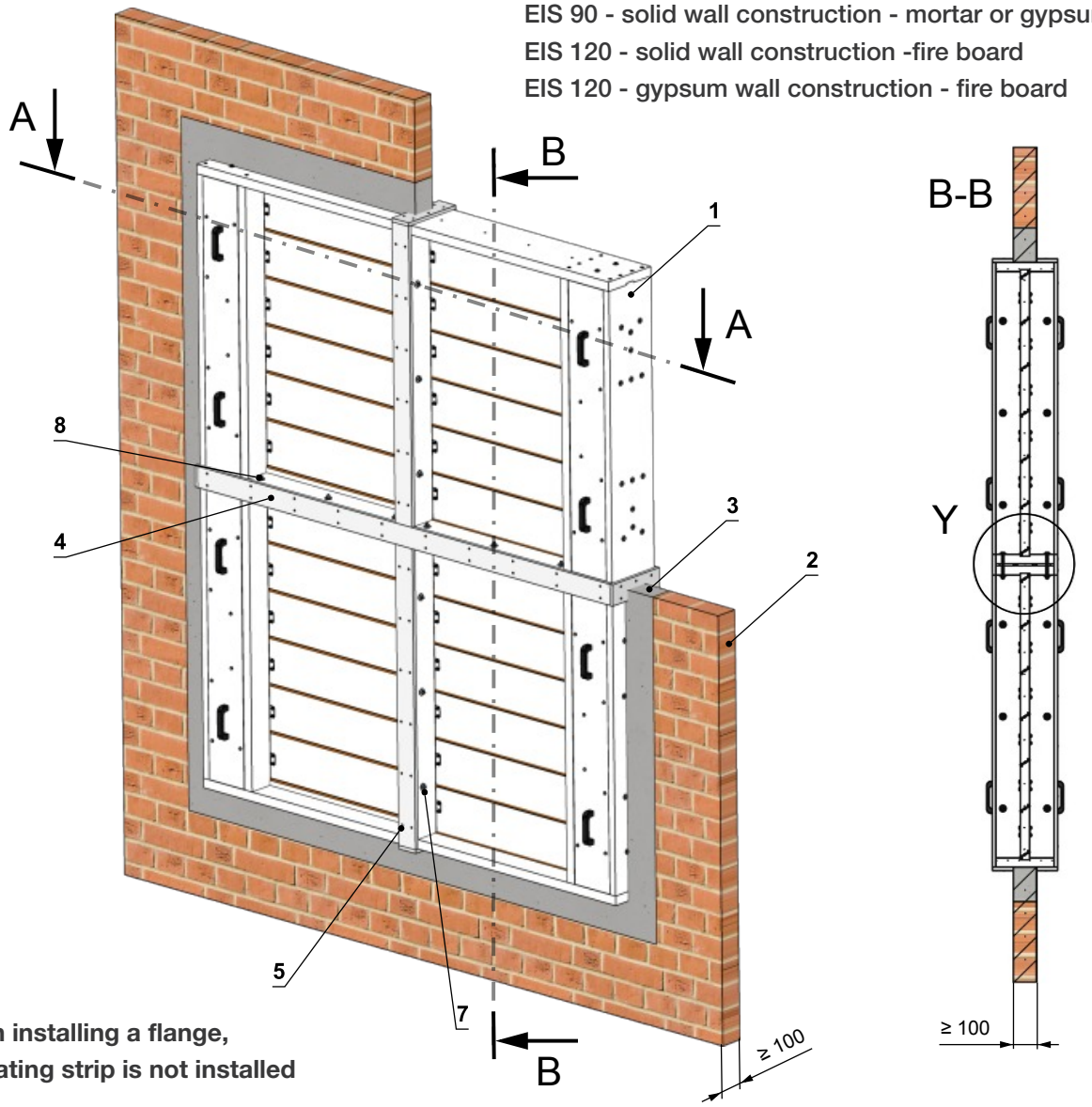

*** When installing a flange, overplating strip is not installed**

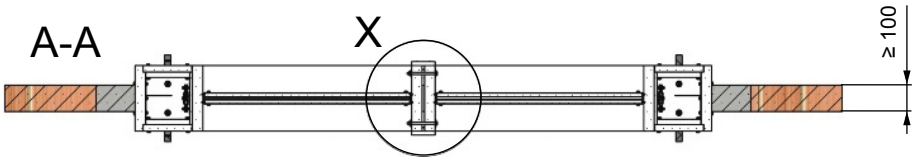

*** Attention!**

Bolts and nuts shall not prevent free rotation on the blades.

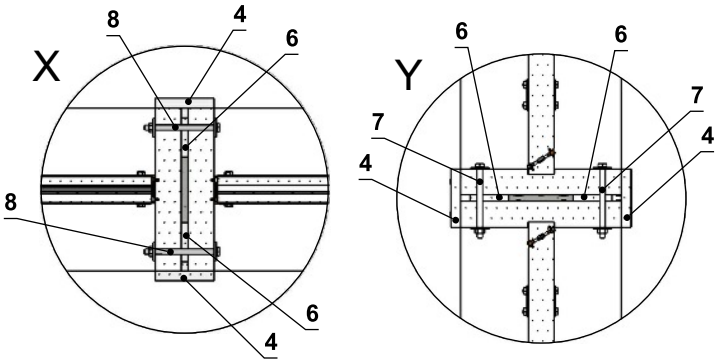

Position:

1. SEDM-L
2. Solid- / gypsum wall construction
3. Mortar or gypsum / Fire board
4. Overplating strip (e.g. Promatect-H, th. 15 mm)*
5. Screw 4x40 (span 200 to 250 mm)
6. Spacing strip (e.g. Promatect-H, th. 10 mm, width 40 to 50 mm)
7. M8 bolt assemply (bolt, 2 pcs large washer, nut), span 200 to 300 mm

Connectin straps, spacer straps, screws and screw connections are not included in the delivery!

3 dampers side by side - solid- / gypsum wall construction - mortar or gypsum / Weichschott fire board

EIS 90 - solid wall construction - mortar or gypsum
EIS 120 - solid wall construction -fire board
EIS 120 - gypsum wall construction - fire board

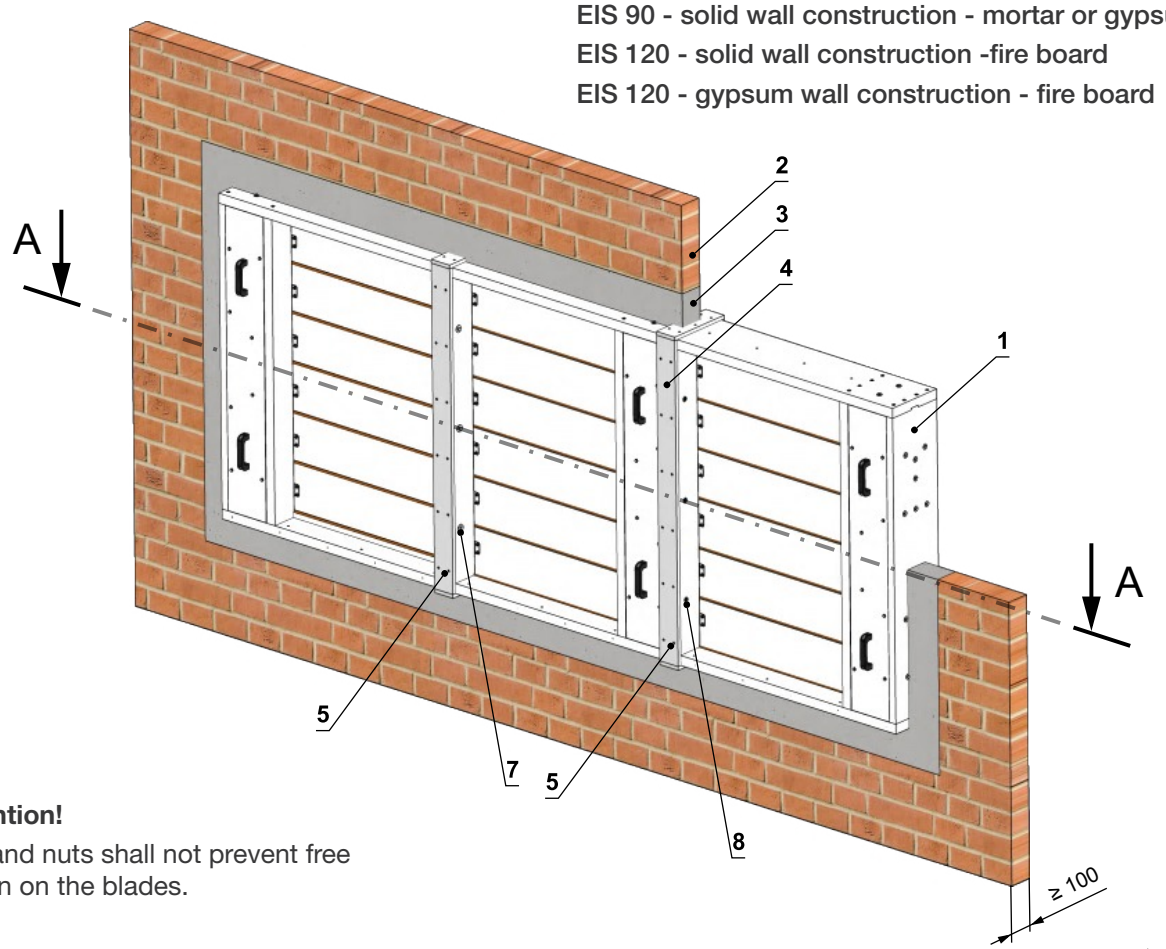

*** Attention!**
Bolts and nuts shall not prevent free rotation on the blades.

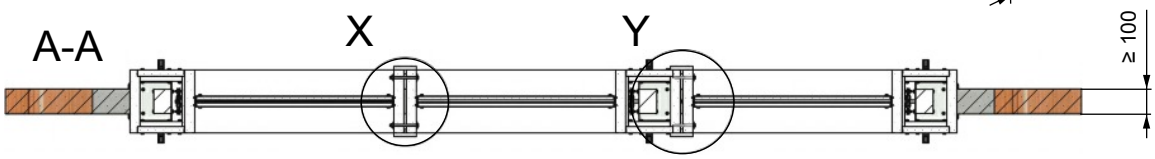

*** When installing a flange, overplating strip is not installed**

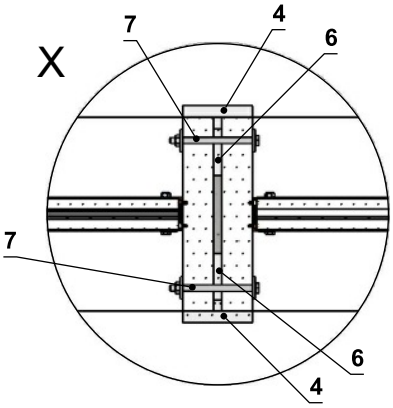

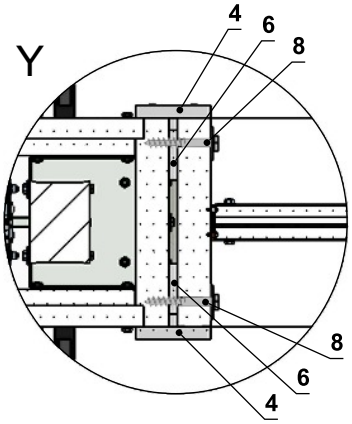

Position:

1. SEDM-L
2. Solid- / gypsum wall construction
3. Mortar or gypsum / Fire board
4. Overplating strip (e.g. Promatect-H, th. 15 mm)*
5. Screw 4x40 (span 200 to 250 mm)
6. Spacing strip (e.g. Promatect-H, th. 10 mm, width 40 to 50 mm)
7. M8 bolt assemply (bolt, 2 pcs large washer, nut) *
8. Screw 6x80 wilh large washer *

Connectin straps, spacer straps, screws and screw connections are not included in the delivery!

3 dampers on top of each other - solid- / gypsum wall construction - mortar or gypsum / Weichschott fire board

EIS 90 - solid wall construction - mortar or gypsum
EIS 120 - solid wall construction -fire board
EIS 120 - gypsum wall construction - fire board

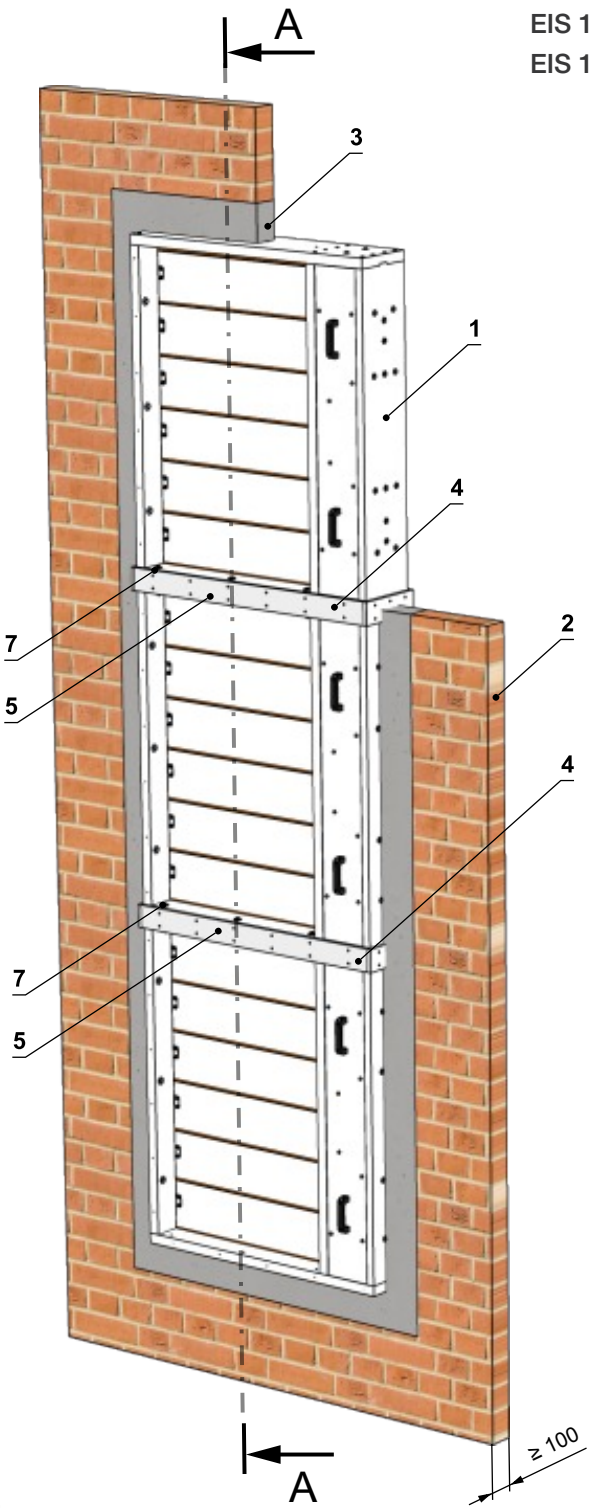

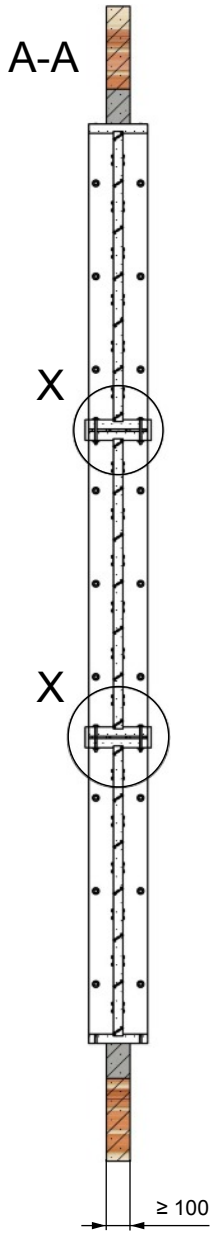

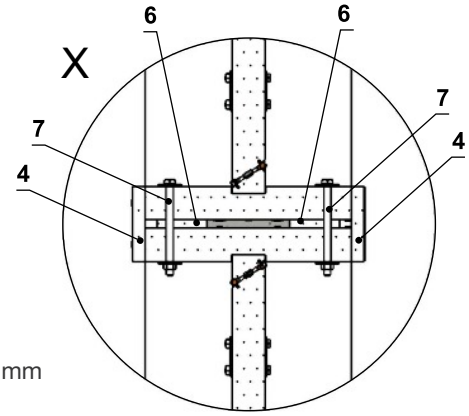

Position:

1. SEDM-L
2. Solid- / gypsum wall construction
3. Mortar or gypsum / Fire board
4. Overplating strip (e.g. Promatect-H, th. 15 mm)*
5. Screw 4x40 (span 200 to 250 mm)
6. Spacing strip (e.g. Promatect-H, th. 10 mm, width 40 to 50 mm)
7. M8 bolt assemply (bolt, 2 pcs large washer, nut), span 200 to 300 mm

Connectin straps, spacer straps, screws and screw connections are not included in the delivery!

4.4 Installation in solid ceiling construction

Solid ceiling - mortar or gypsum

EIS 120

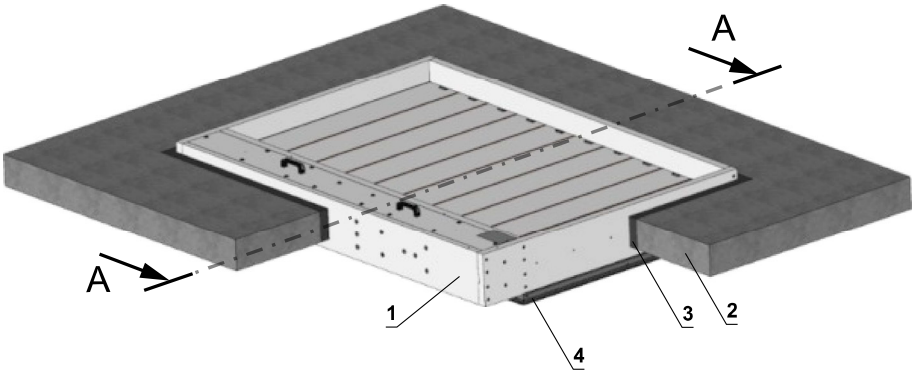

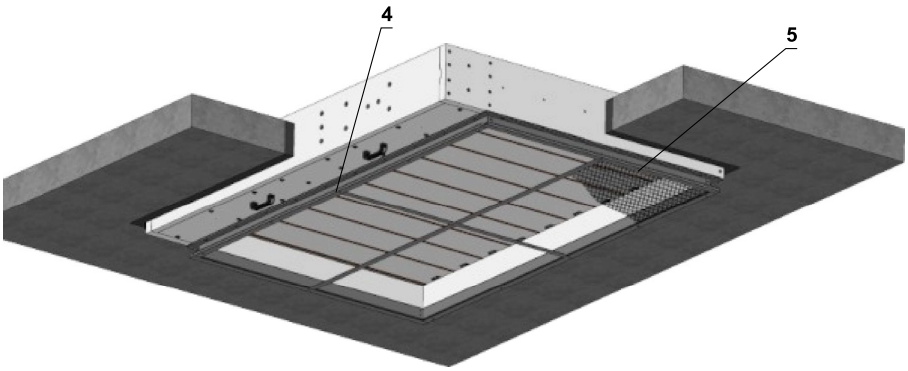

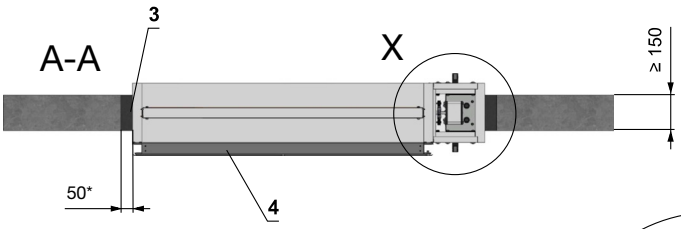

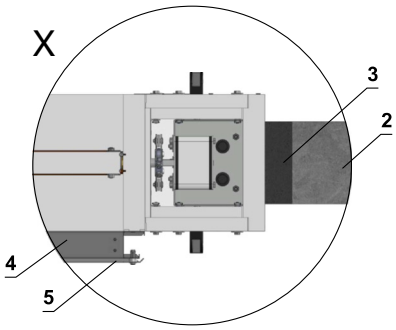

*Recommended size

Position:

1. SEDM-L
2. Solid ceiling
3. Mortar or gypsum
4. Flange
5. Grille

5. Suspension systems

5.1 Mounting to the ceiling wall

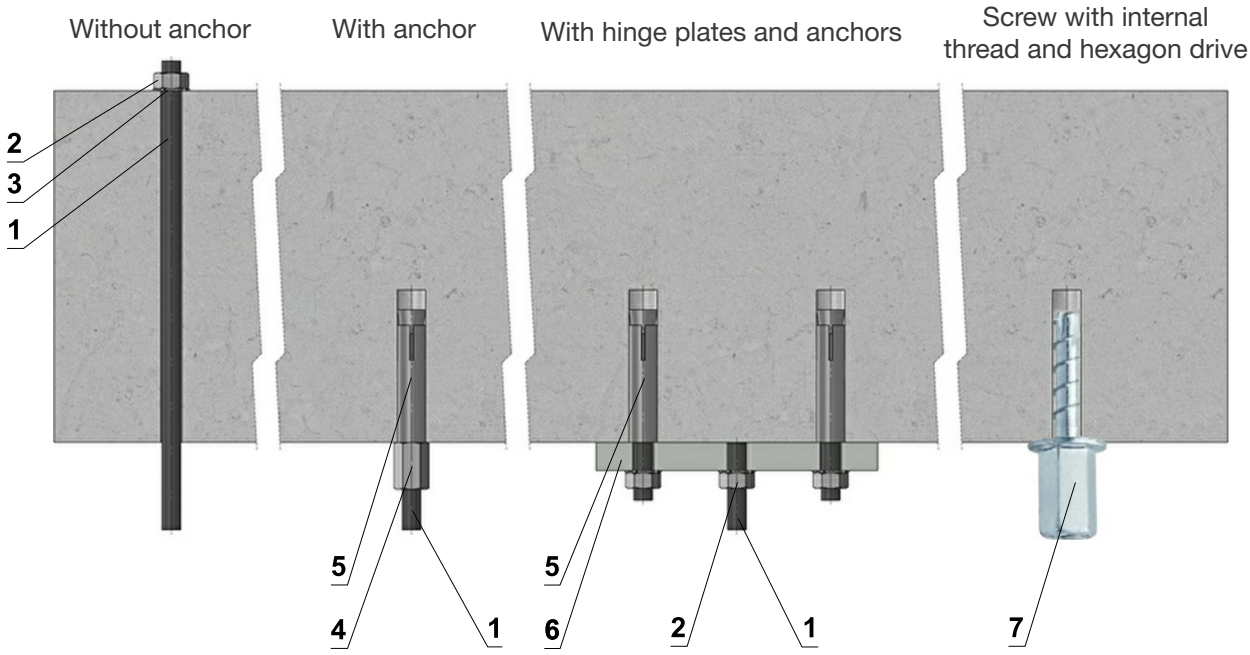

Hinge plates

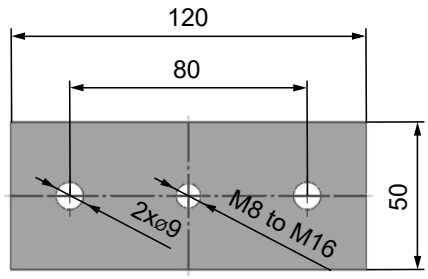

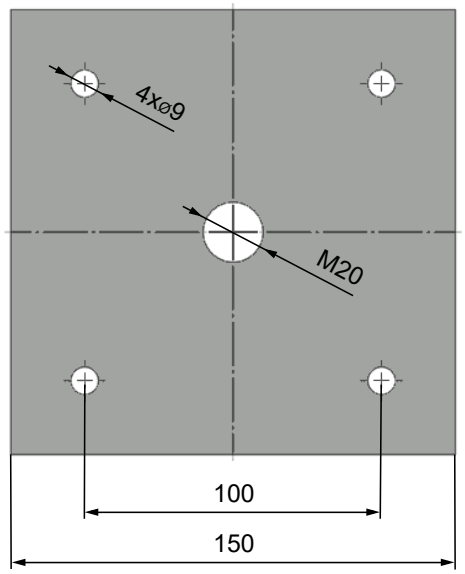

Screw with internal thread and hexagon drive

Position:

1. Threaded rod M8-M20
2. Nut
3. Washer
4. Coupling Nut
5. Anchor
6. Hinge plates - min. thickness 10 mm
7. Concrete screw tested for fire resistance R30-R90, max tension up to 0,75 kN (length 35 mm)

Load capacities of threaded hanger rods F [N] at the required fire resistance 90 minutes.

Size	A_s [mm²]	Weigh G (kg)	
		For 1 piece	For 1 pair
M8	36,6	22	44
M10	58,0	35	70
M12	84,3	52	104
M14	115	70	140
M16	157	96	192
M18	192	117	234
M20	245	150	300

5.2 Fixing SEDM-L to the solid wall construction with Weichschott fire board

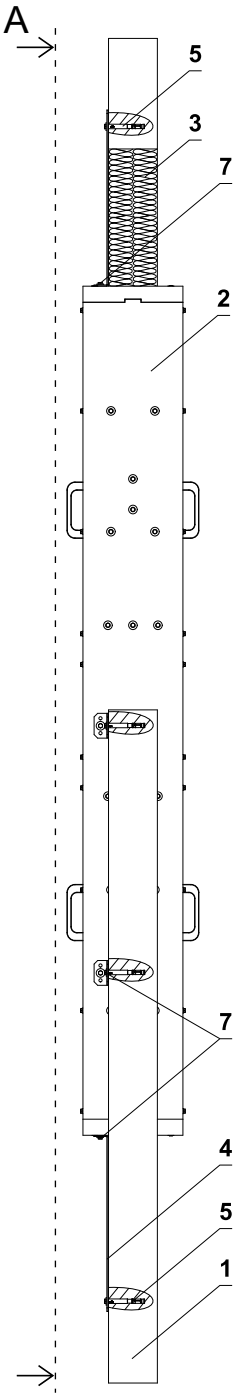

FOR: A < 500 => 1 anchor [1]
A ≥ 500 => 2 anchor [2]

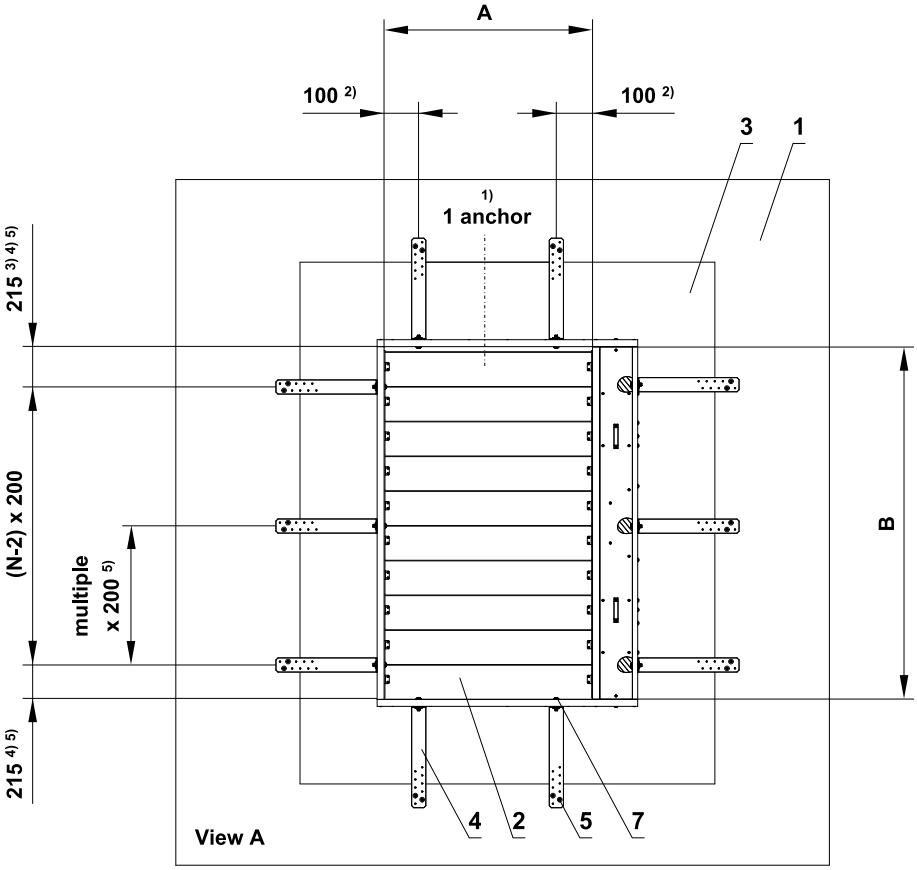

FOR: B = 430 and 630 => 1 anchor [3]
B = 830, 1030, 1230 => 2 anchors [4]
B = 1430, 1630, 1830, 2030 => 3 anchors [5]

N => number of slats

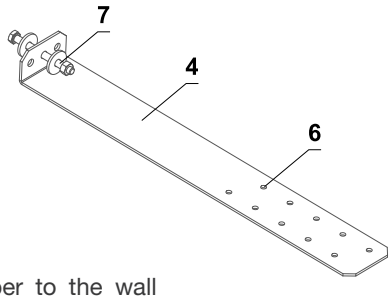

Position:

1. Solid wall construction
2. SEDM-L
3. Fire board
4. Fixing element/steel holder for connecting damper to the wall (recommended type of anchor)
5. Nut M8 with anchor
6. Installation hols
7. M8 bolt assemply (bolt, 2 pcs large washer, nut) *

Attention to the location of the joint!

Screws and nuts must not impede the free rotation of slats.

Note!

The method of mounting must meet the minimum requirements for attachment in accordance with national regulations.

5.3 Fixing SEDM-L to the gypsum wall construction with Weichschott fire board

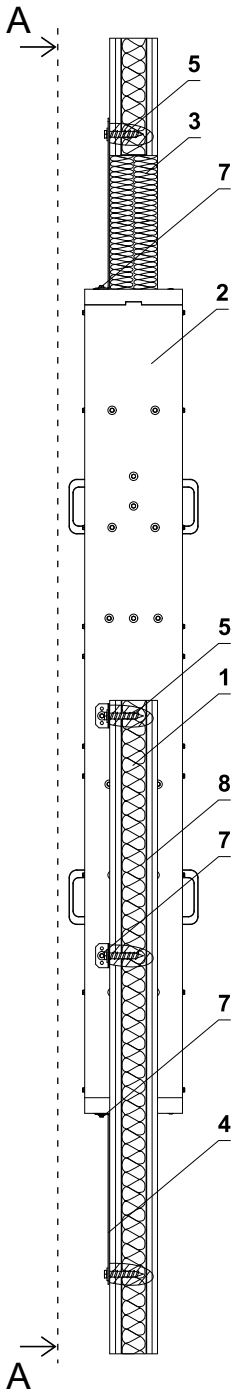

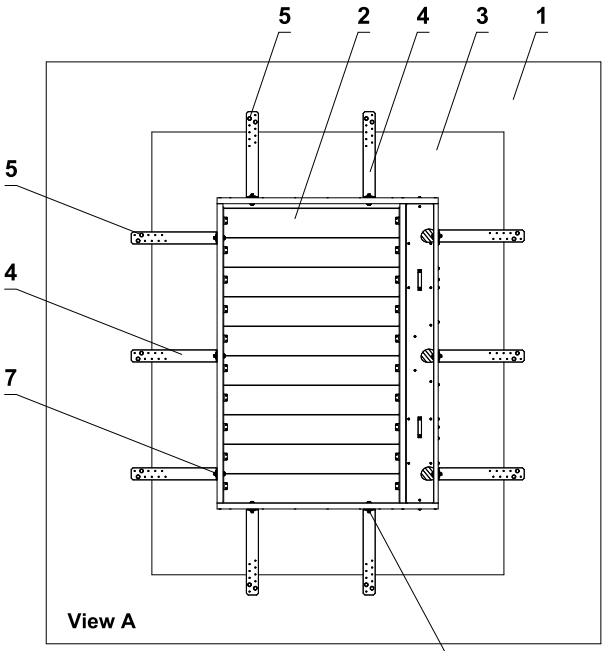

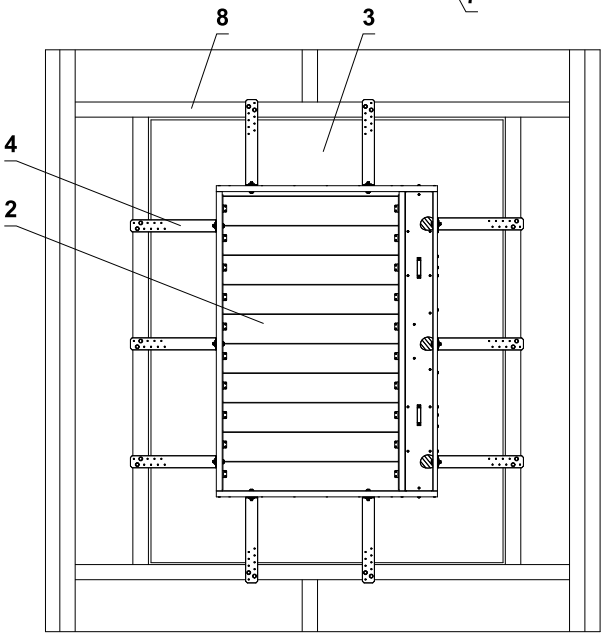

View A - grid from "C" profile

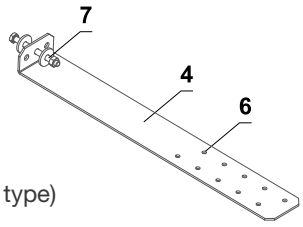

Position:

1. Gypsum wall construction
2. SEDM-L
3. Fire board
4. Fixing element/steel holder for connecting damper to the wall (recommended type)
5. Screw with hexagon head
6. Installation hols
7. M8 bolt assemply (bolt, 2 pcs large washer, nut) *
8. Gypsum grid from ”C” profile

Attention to the location of the joint!

Screws and nuts must not impede the free rotation of slats.

Note!

The method of mounting must meet the minimum requirements for attachment in accordance with national regulations.

5.4 Installation on horizontal duct

The dampers can be suspended using threaded rods and mounting profiles. The dimensions depends on the damper weight (see further guidance on chapter 7.1). The dampers and duct must be suspended separately. The connected piping must be suspended in such a way that the transfer of all loads from the adjoining ventilation duct to the damper body is completely excluded. Adjacent duct must be suspended or supported, as required by the duct suppliers. Threaded rods longer than 1.5 m must be protected by fire insulation. Fastening threaded rods to the ceiling structure – see pg. 26.

Examples of installing and suspending the damper on a horizontal duct

Example 1:

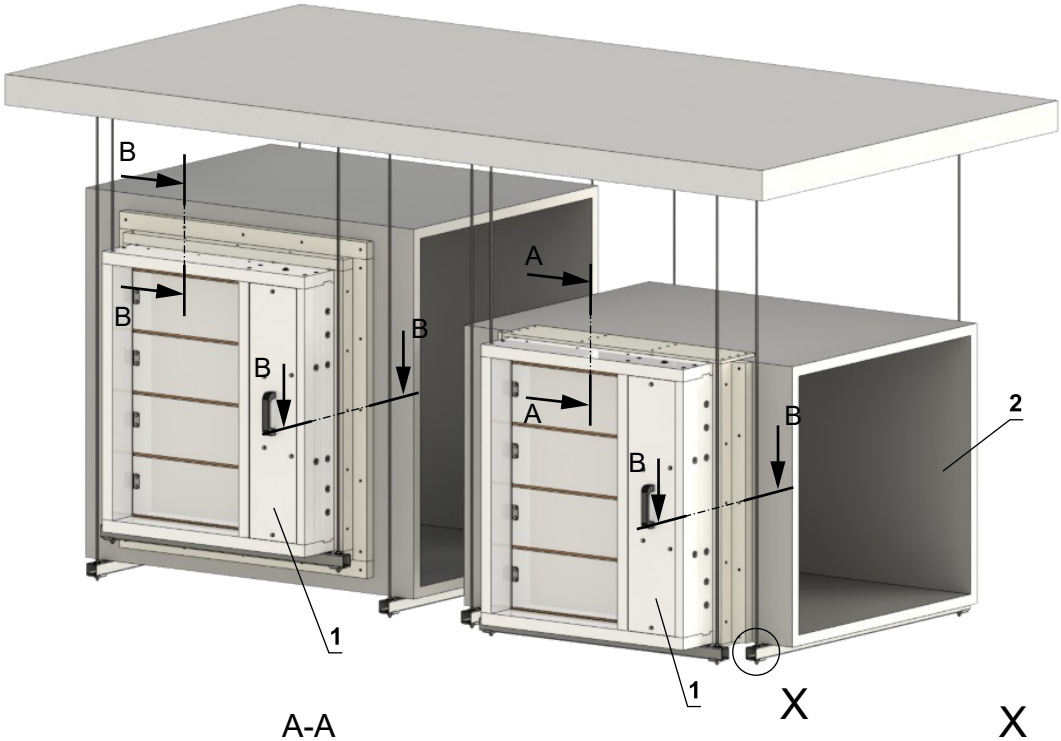

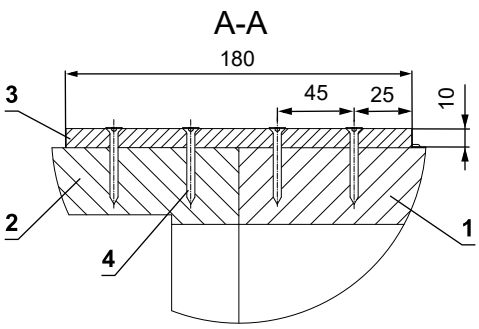

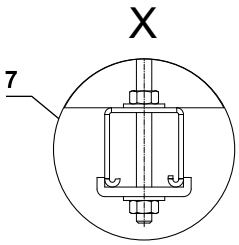

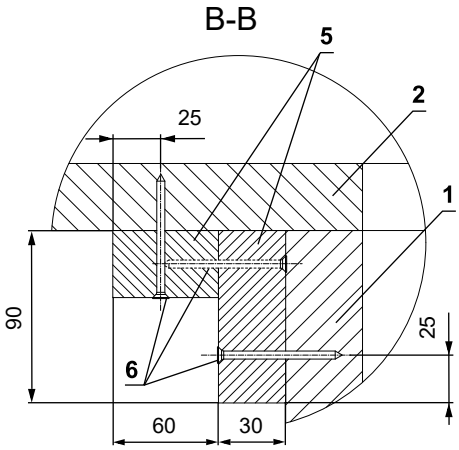

Position:

1. SEDM-L
2. Air duct MULTI (tested according to EN1366-8)
3. Connecting strips according to instructions from smoke extracting duct manufacturers.(e.g. Promatect-H)** All contact surfaces must be glued (e.g. Promat K 84)**
4. Universal self-tapping screw 4x40 or steel staples, span ≤300 mm
5. Angle profile 90x90 consisting of two strips (30x60 a 30x90) made of refractory material (Promatect-H**), connected by screws or staples. All contact surfaces must be glued! (e.g. Promat K 84 **)
6. Universal self-tapping screw 4x60 or steel staples, span ≤300 mm (! Be careful not to cross the screws!)
7. Suspension (1x mounting beam, 1x threaded rod, 2x nut, 2x washer, 1x U-washer)

** Products from other manufacturers with corresponding properties can be used: HILTI, SIKLA, MÜPRO, KONAŘIK etc.

Example 2:

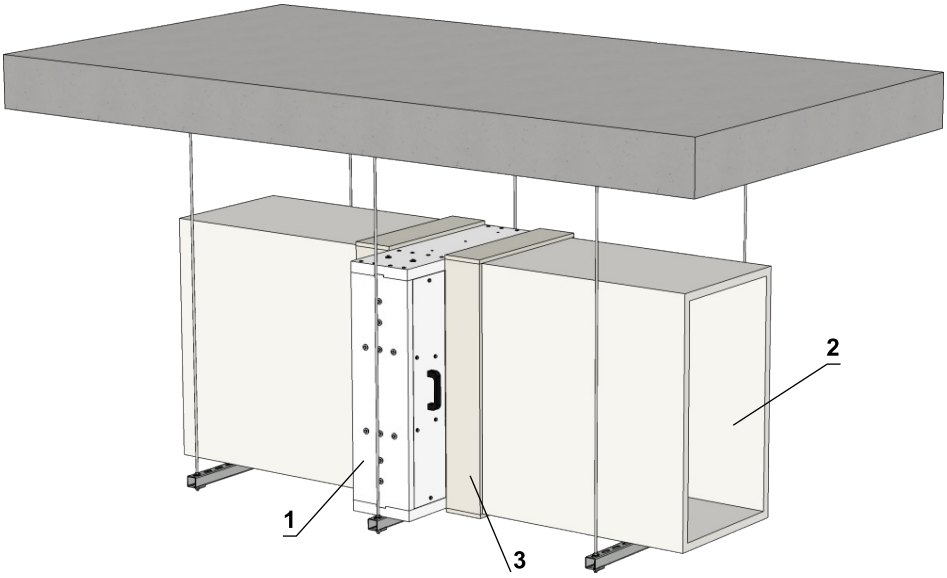

Position:

1. SEDM-L
2. Connecting air duct MULTI
3. Connecting strap

Examples of materials used:
HILTI, SIKLA, MÜPRO, KONAŘIK jne

5.5 Duct connection

Example of connection on a horizontal duct.

Example of connection to sheet steel duct

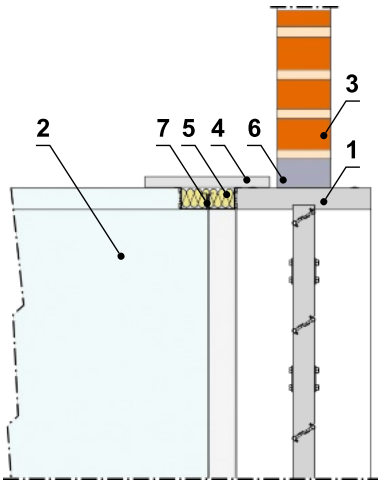

Example of connection to duct made of insulation boards

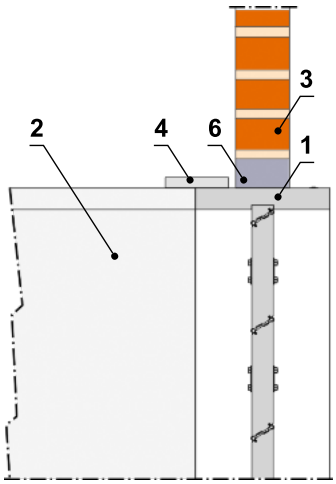

Position:

1. SEDM-L
2. Connecting air duct MULTI
3. solid wall construction
4. connection strap
5. Mineral wool
6. Mortal or gypsum
7. Flange

Example of materials used:

4 Calcium silicate boards, min. density 500 kg/m3, min. th. 30 mm
(E.g. Promatect-L500, Promatect-MST, Promatect-H)

5 Stone wool, min. density 66 kg/m3 – fill the gap around the flange

6. Pressure loss

6.1 Pressure loss calculation:

$$\Delta p = \xi * \rho * (v^2 / 2)$$

Δp - presure loss (Pa)

ξ - coefficient of local pressure loss for the nominal damper section

ρ - air density (kg/m^3)

v - air flow speed in nominal damper section (m/s)

Air density ρ=1,2 kg/m^3

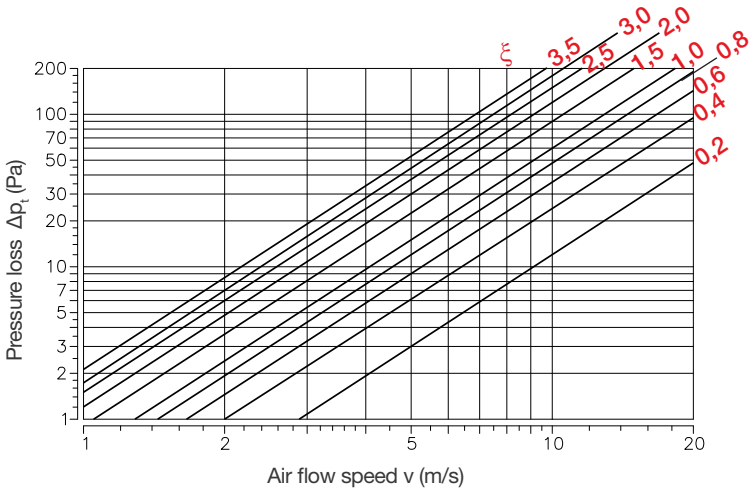

7. Coefficient of local pressure loss ξ

7.1 Installation in duct

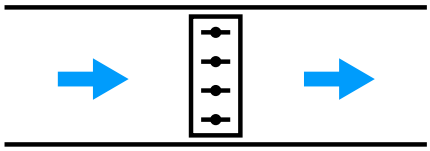

A	B								
	430	630	830	1030	1230	1430	1630	1830	2030
200	0,658	0,586	0,554	0,535	0,523	0,515	0,509	0,504	0,5
250	0,637	0,568	0,536	0,518	0,507	0,499	0,493	0,488	0,484
300	0,624	0,556	0,525	0,508	0,496	0,488	0,482	0,478	0,474
350	0,614	0,548	0,517	0,5	0,489	0,481	0,475	0,471	0,467
400	0,608	0,542	0,512	0,494	0,483	0,476	0,47	0,465	0,462
450	0,602	0,537	0,507	0,49	0,479	0,472	0,466	0,461	0,458
500	0,598	0,533	0,504	0,487	0,476	0,468	0,463	0,458	0,455
550	0,595	0,53	0,501	0,484	0,473	0,466	0,46	0,456	0,452
600	0,592	0,528	0,499	0,482	0,471	0,464	0,458	0,454	0,45
650	0,59	0,526	0,497	0,48	0,469	0,462	0,456	0,452	0,448
700	0,588	0,524	0,495	0,478	0,468	0,46	0,455	0,45	0,447
750	0,586	0,522	0,493	0,477	0,466	0,459	0,453	0,449	0,446
800	0,585	0,521	0,492	0,476	0,465	0,458	0,452	0,448	0,445
850	0,583	0,52	0,491	0,475	0,464	0,457	0,451	0,447	0,444
900	0,582	0,519	0,49	0,474	0,463	0,456	0,45	0,446	0,443
950	0,581	0,518	0,489	0,473	0,462	0,455	0,449	0,445	0,442
1000	0,58	0,517	0,488	0,472	0,462	0,454	0,449	0,444	0,441
1050	0,579	0,516	0,488	0,471	0,461	0,453	0,448	0,444	0,44
1100	0,579	0,516	0,487	0,471	0,46	0,453	0,447	0,443	0,44
1150	0,578	0,515	0,487	0,47	0,46	0,452	0,447	0,443	0,439
1200	0,577	0,515	0,486	0,47	0,459	0,452	0,446	0,442	0,439

7.2 Installation at the beginning of duct - without grille

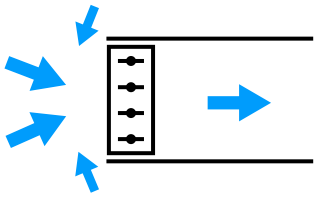

	B								
	430	630	830	1030	1230	1430	1630	1830	2030
200	1,250	1,114	1,052	1,017	0,994	0,978	0,967	0,958	0,950
250	1,210	1,079	1,019	0,985	0,963	0,947	0,936	0,927	0,920
300	1,185	1,056	0,998	0,964	0,943	0,928	0,916	0,908	0,901
350	1,167	1,041	0,983	0,950	0,929	0,914	0,903	0,894	0,888
400	1,154	1,029	0,972	0,939	0,918	0,904	0,893	0,884	0,878
450	1,144	1,020	0,964	0,931	0,911	0,896	0,885	0,877	0,870
500	1,137	1,013	0,957	0,925	0,904	0,890	0,879	0,871	0,864
550	1,130	1,008	0,952	0,920	0,899	0,885	0,874	0,866	0,859
600	1,125	1,003	0,947	0,916	0,895	0,881	0,870	0,862	0,855
650	1,121	0,999	0,944	0,912	0,891	0,877	0,867	0,858	0,852
700	1,117	0,996	0,940	0,909	0,888	0,874	0,864	0,856	0,849
750	1,113	0,993	0,938	0,906	0,886	0,872	0,861	0,853	0,847
800	1,111	0,990	0,935	0,904	0,884	0,869	0,859	0,851	0,845
850	1,108	0,988	0,933	0,902	0,882	0,868	0,857	0,849	0,843
900	1,106	0,986	0,931	0,900	0,880	0,866	0,855	0,847	0,841
950	1,104	0,984	0,930	0,898	0,878	0,864	0,854	0,846	0,839
1000	1,102	0,983	0,928	0,897	0,877	0,863	0,852	0,844	0,838
1050	1,101	0,981	0,927	0,896	0,876	0,862	0,851	0,843	0,837
1100	1,099	0,980	0,926	0,895	0,875	0,860	0,850	0,842	0,836
1150	1,098	0,979	0,924	0,893	0,873	0,859	0,849	0,841	0,835
1200	1,097	0,978	0,923	0,893	0,872	0,858	0,848	0,840	0,834

7.3 Installation at the beginning of duct - with grille

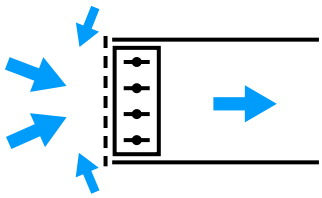

A	B								
	430	630	830	1030	1230	1430	1630	1830	2030
200	2,350	2,214	2,152	2,117	2,094	2,078	2,067	2,058	2,050
250	2,310	2,179	2,119	2,085	2,063	2,047	2,036	2,027	2,020
300	2,285	2,156	2,098	2,064	2,043	2,028	2,016	2,008	2,001
350	2,267	2,141	2,083	2,050	2,029	2,014	2,003	1,994	1,988
400	2,254	2,129	2,072	2,039	2,018	2,004	1,993	1,984	1,978
450	2,244	2,120	2,064	2,031	2,011	1,996	1,985	1,977	1,970
500	2,237	2,113	2,057	2,025	2,004	1,990	1,979	1,971	1,964
550	2,230	2,108	2,052	2,020	1,999	1,985	1,974	1,966	1,959
600	2,225	2,103	2,047	2,016	1,995	1,981	1,970	1,962	1,955
650	2,221	2,099	2,044	2,012	1,991	1,977	1,967	1,958	1,952
700	2,217	2,096	2,040	2,009	1,988	1,974	1,964	1,956	1,949
750	2,213	2,093	2,038	2,006	1,986	1,972	1,961	1,953	1,947
800	2,211	2,090	2,035	2,004	1,984	1,969	1,959	1,951	1,945
850	2,208	2,088	2,033	2,002	1,982	1,968	1,957	1,949	1,943
900	2,206	2,086	2,031	2,000	1,980	1,966	1,955	1,947	1,941
950	2,204	2,084	2,030	1,998	1,978	1,964	1,954	1,946	1,939
1000	2,202	2,083	2,028	1,997	1,977	1,963	1,952	1,944	1,938
1050	2,201	2,081	2,027	1,996	1,976	1,962	1,951	1,943	1,937
1100	2,199	2,080	2,026	1,995	1,975	1,960	1,950	1,942	1,936
1150	2,198	2,079	2,024	1,993	1,973	1,959	1,949	1,941	1,935
1200	2,197	2,078	2,023	1,993	1,972	1,958	1,948	1,940	1,934

7.4 Installation at the beginning of duct in the wall - without grille

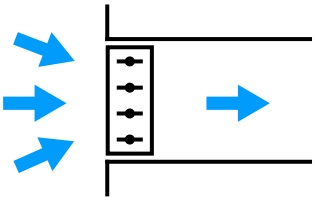

A	B								
	430	630	830	1030	1230	1430	1630	1830	2030
200	1,151	1,026	0,969	0,937	0,916	0,901	0,890	0,882	0,875
250	1,115	0,994	0,939	0,907	0,887	0,873	0,862	0,854	0,848
300	1,091	0,973	0,919	0,888	0,868	0,854	0,844	0,836	0,830
350	1,075	0,958	0,905	0,875	0,855	0,842	0,832	0,824	0,818
400	1,063	0,948	0,895	0,865	0,846	0,832	0,822	0,815	0,808
450	1,054	0,940	0,888	0,858	0,839	0,825	0,815	0,808	0,802
500	1,047	0,933	0,882	0,852	0,833	0,820	0,810	0,802	0,796
550	1,041	0,928	0,877	0,847	0,828	0,815	0,805	0,798	0,792
600	1,036	0,924	0,872	0,843	0,824	0,811	0,801	0,794	0,788
650	1,032	0,920	0,869	0,840	0,821	0,808	0,798	0,791	0,785
700	1,029	0,917	0,866	0,837	0,818	0,805	0,796	0,788	0,782
750	1,026	0,914	0,864	0,835	0,816	0,803	0,793	0,786	0,780
800	1,023	0,912	0,861	0,833	0,814	0,801	0,791	0,784	0,778
850	1,021	0,910	0,859	0,831	0,812	0,799	0,789	0,782	0,776
900	1,019	0,908	0,858	0,829	0,810	0,797	0,788	0,780	0,775
950	1,017	0,906	0,856	0,828	0,809	0,796	0,786	0,779	0,773
1000	1,015	0,905	0,855	0,826	0,808	0,795	0,785	0,778	0,772
1050	1,014	0,904	0,854	0,825	0,807	0,794	0,784	0,777	0,771
1100	1,012	0,903	0,853	0,824	0,805	0,793	0,783	0,776	0,770
1150	1,011	0,901	0,851	0,823	0,805	0,792	0,782	0,775	0,769
1200	1,010	0,900	0,851	0,822	0,804	0,791	0,781	0,774	0,768

7.5 Installation at the beginning of duct in the wall - with grille

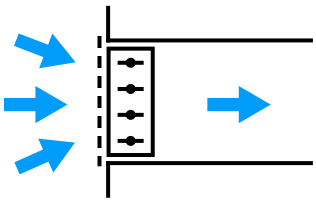

A	B								
	430	630	830	1030	1230	1430	1630	1830	2030
200	2,251	2,126	2,069	2,037	2,016	2,001	1,990	1,982	1,975
250	2,215	2,094	2,039	2,007	1,987	1,973	1,962	1,954	1,948
300	2,191	2,073	2,019	1,988	1,968	1,954	1,944	1,936	1,930
350	2,175	2,058	2,005	1,975	1,955	1,942	1,932	1,924	1,918
400	2,163	2,048	1,995	1,965	1,946	1,932	1,922	1,915	1,908
450	2,154	2,040	1,988	1,958	1,939	1,925	1,915	1,908	1,902
500	2,147	2,033	1,982	1,952	1,933	1,920	1,910	1,902	1,896
550	2,141	2,028	1,977	1,947	1,928	1,915	1,905	1,898	1,892
600	2,136	2,024	1,972	1,943	1,924	1,911	1,901	1,894	1,888
650	2,132	2,020	1,969	1,940	1,921	1,908	1,898	1,891	1,885
700	2,129	2,017	1,966	1,937	1,918	1,905	1,896	1,888	1,882
750	2,126	2,014	1,964	1,935	1,916	1,903	1,893	1,886	1,880
800	2,123	2,012	1,961	1,933	1,914	1,901	1,891	1,884	1,878
850	2,121	2,010	1,959	1,931	1,912	1,899	1,889	1,882	1,876
900	2,119	2,008	1,958	1,929	1,910	1,897	1,888	1,880	1,875
950	2,117	2,006	1,956	1,928	1,909	1,896	1,886	1,879	1,873
1000	2,115	2,005	1,955	1,926	1,908	1,895	1,885	1,878	1,872
1050	2,114	2,004	1,954	1,925	1,907	1,894	1,884	1,877	1,871
1100	2,112	2,003	1,953	1,924	1,905	1,893	1,883	1,876	1,870
1150	2,111	2,001	1,951	1,923	1,905	1,892	1,882	1,875	1,869
1200	2,110	2,000	1,951	1,922	1,904	1,891	1,881	1,874	1,868

7.6 Installation in the wall between the rooms - 1 grille

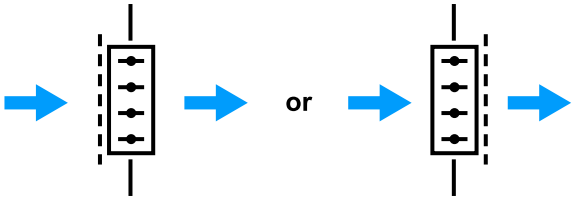

	B								
A	430	630	830	1030	1230	1430	1630	1830	2030
200	3,994	3,680	3,537	3,456	3,403	3,366	3,339	3,318	3,301
250	3,903	3,599	3,460	3,381	3,330	3,294	3,268	3,247	3,231
300	3,844	3,546	3,411	3,333	3,283	3,248	3,222	3,202	3,187
350	3,803	3,510	3,376	3,300	3,251	3,216	3,191	3,171	3,156
400	3,773	3,483	3,351	3,276	3,227	3,193	3,168	3,148	3,133
450	3,750	3,463	3,332	3,257	3,209	3,175	3,150	3,131	3,115
500	3,732	3,446	3,316	3,242	3,194	3,160	3,136	3,117	3,101
550	3,717	3,433	3,304	3,230	3,182	3,149	3,124	3,105	3,090
600	3,705	3,422	3,294	3,220	3,173	3,139	3,115	3,096	3,081
650	3,695	3,413	3,285	3,212	3,165	3,131	3,107	3,088	3,073
700	3,686	3,405	3,278	3,205	3,158	3,125	3,100	3,081	3,067
750	3,679	3,399	3,271	3,199	3,152	3,119	3,094	3,076	3,061
800	3,672	3,393	3,266	3,193	3,146	3,114	3,089	3,071	3,056
850	3,666	3,388	3,261	3,189	3,142	3,109	3,085	3,066	3,051
900	3,661	3,383	3,257	3,184	3,138	3,105	3,081	3,062	3,048
950	3,657	3,379	3,253	3,181	3,134	3,101	3,077	3,059	3,044
1000	3,652	3,375	3,249	3,177	3,131	3,098	3,074	3,056	3,041
1050	3,649	3,372	3,246	3,174	3,128	3,095	3,071	3,053	3,038
1100	3,645	3,369	3,243	3,172	3,125	3,093	3,069	3,050	3,036
1150	3,642	3,366	3,241	3,169	3,123	3,090	3,066	3,048	3,033
1200	3,640	3,364	3,239	3,167	3,121	3,088	3,064	3,046	3,031

7.7 Installation in the wall between the rooms - 2 grille

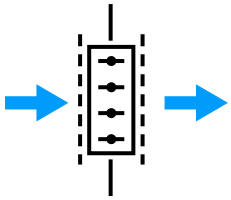

	B								
A	430	630	830	1030	1230	1430	1630	1830	2030
200	4,894	4,580	4,437	4,356	4,303	4,266	4,239	4,218	4,201
250	4,803	4,499	4,360	4,281	4,230	4,194	4,168	4,147	4,131
300	4,744	4,446	4,311	4,233	4,183	4,148	4,122	4,102	4,087
350	4,703	4,410	4,276	4,200	4,151	4,116	4,091	4,071	4,056
400	4,673	4,383	4,251	4,176	4,127	4,093	4,068	4,048	4,033
450	4,650	4,363	4,232	4,157	4,109	4,075	4,050	4,031	4,015
500	4,632	4,346	4,216	4,142	4,094	4,060	4,036	4,017	4,001
550	4,617	4,333	4,204	4,130	4,082	4,049	4,024	4,005	3,990
600	4,605	4,322	4,194	4,120	4,073	4,039	4,015	3,996	3,981
650	4,595	4,313	4,185	4,112	4,065	4,031	4,007	3,988	3,973
700	4,586	4,305	4,178	4,105	4,058	4,025	4,000	3,981	3,967
750	4,579	4,299	4,171	4,099	4,052	4,019	3,994	3,976	3,961
800	4,572	4,293	4,166	4,093	4,046	4,014	3,989	3,971	3,956
850	4,566	4,288	4,161	4,089	4,042	4,009	3,985	3,966	3,951
900	4,561	4,283	4,157	4,084	4,038	4,005	3,981	3,962	3,948
950	4,557	4,279	4,153	4,081	4,034	4,001	3,977	3,959	3,944
1000	4,552	4,275	4,149	4,077	4,031	3,998	3,974	3,956	3,941
1050	4,549	4,272	4,146	4,074	4,028	3,995	3,971	3,953	3,938
1100	4,545	4,269	4,143	4,072	4,025	3,993	3,969	3,950	3,936
1150	4,542	4,266	4,141	4,069	4,023	3,990	3,966	3,948	3,933
1200	4,540	4,264	4,139	4,067	4,021	3,988	3,964	3,946	3,931

8. Noise data

Level of acoustic output corrected with filter A

Air velocity 2 m/s

Level of coustic output [dB]									
A	B								
	430	630	830	1030	1230	1430	1630	1830	2030
200	27	28	29	30	30	31	31	32	32
250	28	29	30	30	31	32	32	33	33
300	28	29	30	31	32	32	33	33	34
350	29	30	31	32	32	33	33	34	34
400	29	30	31	32	33	33	34	34	35
450	30	31	32	33	33	34	34	35	35
500	30	31	32	33	34	34	35	35	36
550	31	32	33	33	34	35	35	36	36
600	31	32	33	34	34	35	36	36	36
650	31	32	33	34	35	35	36	36	37
700	32	33	34	34	35	36	36	37	37
750	32	33	34	35	35	36	36	37	37
800	32	33	34	35	36	36	37	37	38
850	32	34	34	35	36	36	37	37	38
900	33	34	35	35	36	37	37	38	38
950	33	34	35	36	36	37	37	38	38
1000	33	34	35	36	37	37	38	38	39
1050	33	34	35	36	37	37	38	38	39
1100	34	35	36	36	37	38	38	39	39
1150	34	35	36	36	37	38	38	39	39
1200	34	35	36	37	37	38	38	39	39

Air velocity 3 m/s

Level of coustic output [dB]									
A	B								
	430	630	830	1030	1230	1430	1630	1830	2030
200	36	37	38	39	39	40	40	41	41
250	37	38	39	39	40	41	41	42	42
300	37	38	39	40	41	41	42	42	43
350	38	39	40	41	41	42	42	43	43
400	38	39	40	41	42	42	43	43	44
450	39	40	41	42	42	43	43	44	44
500	39	40	41	42	43	43	44	44	45
550	40	41	42	42	43	44	44	45	45
600	40	41	42	43	43	44	45	45	45
650	40	41	42	43	44	44	45	45	46
700	41	42	43	43	44	45	45	46	46
750	41	42	43	44	44	45	45	46	46
800	41	42	43	44	45	45	46	46	47
850	41	43	43	44	45	45	46	46	47
900	42	43	44	44	45	46	46	47	47
950	42	43	44	45	45	46	46	47	47
1000	42	43	44	45	46	46	47	47	48
1050	42	43	44	45	46	46	47	47	48
1100	43	44	45	45	46	47	47	48	48
1150	43	44	45	45	46	47	47	48	48
1200	43	44	45	46	46	47	47	48	48

Air velocity 4 m/s

Level of coustic output [dB]									
A	B								
	430	630	830	1030	1230	1430	1630	1830	2030
200	42	43	44	45	46	47	47	47	48
250	43	44	45	46	47	47	48	48	49
300	44	45	46	47	47	48	49	49	49
350	44	46	47	47	48	49	49	50	50
400	45	46	47	48	49	49	50	50	51
450	45	47	48	48	49	50	50	51	51
500	46	47	48	49	50	50	51	51	52
550	46	47	48	49	50	51	51	52	52
600	47	48	49	50	50	51	51	52	52
650	47	48	49	50	51	51	52	52	53
700	47	48	49	50	51	52	52	53	53
750	48	49	50	51	51	52	52	53	53
800	48	49	50	51	51	52	53	53	53
850	48	49	50	51	52	52	53	53	54
900	48	50	50	51	52	53	53	54	54
950	49	50	51	52	52	53	53	54	54
1000	49	50	51	52	52	53	54	54	54
1050	49	50	51	52	53	53	54	54	55
1100	49	50	51	52	53	53	54	54	55
1150	49	51	52	52	53	54	54	55	55
1200	50	51	52	53	53	54	54	55	55

Air velocity 5 m/s

Level of coustic output [dB]									
A	B								
	430	630	830	1030	1230	1430	1630	1830	2030
200	49	50	51	52	53	54	54	54	55
250	50	51	52	53	54	54	55	55	56
300	51	52	53	54	54	55	56	56	56
350	51	53	54	54	55	56	56	57	57
400	52	53	54	55	56	56	57	57	58
450	52	54	55	55	56	57	57	58	58
500	53	54	55	56	57	57	58	58	59
550	53	54	55	56	57	58	58	59	59
600	54	55	56	57	57	58	58	59	59
650	54	55	56	57	58	58	59	59	60
700	54	55	56	57	58	59	59	60	60
750	55	56	57	58	58	59	59	60	60
800	55	56	57	58	58	59	60	60	60
850	55	56	57	58	59	59	60	60	61
900	55	57	57	58	59	60	60	61	61
950	56	57	58	59	59	60	60	61	61
1000	56	57	58	59	59	60	61	61	61
1050	56	57	58	59	60	60	61	61	62
1100	56	57	58	59	60	60	61	61	62
1150	56	58	59	59	60	61	61	62	62
1200	57	58	59	60	60	61	61	62	62

Air velocity 6 m/s

Level of coustic output [dB]									
A	B								
	430	630	830	1030	1230	1430	1630	1830	2030
200	54	55	56	57	58	58	59	59	60
250	55	56	57	58	59	59	60	60	61
300	55	57	58	59	59	60	60	61	61
350	56	57	58	59	60	60	61	61	62
400	57	58	59	60	60	61	62	62	62
450	57	58	59	60	61	62	62	63	63
500	57	59	60	61	61	62	62	63	63
550	58	59	60	61	62	62	63	63	64
600	58	60	61	61	62	63	63	64	64
650	59	60	61	62	62	63	64	64	64
700	59	60	61	62	63	63	64	64	65
750	59	60	61	62	63	64	64	65	65
800	59	61	62	63	63	64	64	65	65
850	60	61	62	63	64	64	65	65	66
900	60	61	62	63	64	64	65	65	66
950	60	61	62	63	64	65	65	66	66
1000	60	62	63	64	64	65	65	66	66
1050	61	62	63	64	64	65	66	66	67
1100	61	62	63	64	65	65	66	66	67
1150	61	62	63	64	65	65	66	66	67
1200	61	62	63	64	65	66	66	67	67

Air velocity 8 m/s

Level of coustic output [dB]									
A	B								
	430	630	830	1030	1230	1430	1630	1830	2030
200	60	62	63	64	64	65	66	66	66
250	61	63	64	65	65	66	66	67	67
300	62	63	64	65	66	67	67	68	68
350	63	64	65	66	67	67	68	68	69
400	63	65	66	67	67	68	68	69	69
450	64	65	66	67	68	68	69	69	70
500	64	66	67	67	68	69	69	70	70
550	65	66	67	68	69	69	70	70	71
600	65	66	67	68	69	70	70	71	71
650	65	67	68	69	69	70	70	71	71
700	66	67	68	69	70	70	71	71	72
750	66	67	68	69	70	71	71	72	72
800	66	68	69	69	70	71	71	72	72
850	66	68	69	70	70	71	72	72	73
900	67	68	69	70	71	71	72	72	73
950	67	68	69	70	71	72	72	73	73
1000	67	68	70	70	71	72	72	73	73
1050	67	69	70	71	71	72	73	73	73
1100	67	69	70	71	72	72	73	73	74
1150	68	69	70	71	72	72	73	73	74
1200	68	69	70	71	72	73	73	74	74

Air velocity 10 m/s

Level of coustic output [dB]									
A	B								
	430	630	830	1030	1230	1430	1630	1830	2030
200	66	68	69	70	70	71	72	72	72
250	67	69	70	71	71	72	72	73	73
300	68	69	70	71	72	73	73	74	74
350	68	70	71	72	73	73	74	74	75
400	69	71	72	72	73	74	74	75	75
450	70	71	72	73	74	74	75	75	76
500	70	71	73	73	74	75	75	76	76
550	70	72	73	74	75	75	76	76	77
600	71	72	73	74	75	76	76	77	77
650	71	73	74	75	75	76	76	77	77
700	71	73	74	75	76	76	77	77	78
750	72	73	74	75	76	77	77	78	78
800	72	73	75	75	76	77	77	78	78
850	72	74	75	76	76	77	78	78	79
900	72	74	75	76	77	77	78	78	79
950	73	74	75	76	77	78	78	79	79
1000	73	74	76	76	77	78	78	79	79
1050	73	75	76	77	77	78	79	79	79
1100	73	75	76	77	78	78	79	79	80
1150	74	75	76	77	78	78	79	79	80
1200	74	75	76	77	78	79	79	80	80

Air velocity 12 m/s

Level of coustic output [dB]									
A	B								
	430	630	830	1030	1230	1430	1630	1830	2030
200	71	73	74	75	75	76	76	77	77
250	72	73	75	75	76	77	77	78	78
300	73	74	75	76	77	78	78	79	79
350	73	75	76	77	78	78	79	79	80
400	74	75	77	77	78	79	79	80	80
450	74	76	77	78	79	79	80	80	81
500	75	76	77	78	79	80	80	81	81
550	75	77	78	79	80	80	81	81	82
600	76	77	78	79	80	81	81	82	82
650	76	77	79	79	80	81	81	82	82
700	76	78	79	80	81	81	82	82	83
750	77	78	79	80	81	81	82	83	83
800	77	78	79	80	81	82	82	83	83
850	77	79	80	81	81	82	83	83	84
900	77	79	80	81	82	82	83	83	84
950	78	79	80	81	82	82	83	84	84
1000	78	79	80	81	82	83	83	84	84
1050	78	80	81	82	82	83	83	84	84
1100	78	80	81	82	82	83	84	84	85
1150	78	80	81	82	83	83	84	84	85
1200	79	80	81	82	83	84	84	85	85

Material, surface treatment

Damper bodies and slats are made of asbestos-free fire-resistant mineral fibre boards.

Damper bodies and slats can be coated with Promat 2000 anti-moisture coating or Promat-SR anti-aggressive coating.

The connecting material is galvanised.

According to the customer's request, a stainless-steel damper can be supplied.

Specification of stainless-steel design - division of stainless-steel material:

- class A2 - food stainless-steel (AISI 304 - EN 17240)
- class A4 - chemical stainless-steel (AISI 316, 316L - EN 17346, 17349)

Everything that is located or enters the inner space or the cross-section of the damper is from a given stainless-steel material. The parts located outside the body and in the damper mechanism space are made of galvanised material as standard. In the case of the stainless-steel design, the cover grilles are always made of galvanised material with a "powder-coated" coating.

Plastic, rubber and silicone parts, sealants, foaming tapes, seals from glass-ceramic materials, brass housing, sheet bearings, actuators are the same for all material versions of dampers.

Some types of fasteners and parts are only available from one type of stainless steel, this type will be used in all stainless-steel designs.

The slats and body of the dampers for chemical design (class A4) are always provided with a coating against the effect of Promat SR chemicals.

Other design requirements are taken as atypical and will be solved individually, according to customer requirements.

Inspection and testing

Dimensions are checked with common gauges according to the standard of non-tolerated dimensions used in air conditioning.

Inter-operational inspections of parts and main dimensions are performed according to the drawing documentation.

After workshop assembly, a 100% check of the functionality of the closing device and electrical elements is performed.

Logistic terms

Dampers are delivered on special pallets. Other packaging methods must be agreed with the manufacturer in advance. If packaging is used, these are non-refundable and their price is included in the product price.

Depending on the weight of the delivery, it's advisable to provide handling equipment for stacking at the unloading location.

The dampers are transported in covered transport, there must be no severe shocks and the ambient temperature must not exceed +50°C. When handling during transport, the dampers must be protected against mechanical damage and weathering. The damper slat must be in a "CLOSED" position during transport.

If the acceptance method isn't specified in the order, handing over dampers will be considered acceptance.

Dampers must be stored in covered buildings, in an environment free of aggressive vapours, gases and dust. A temperature in the range of -5°C to +40°C and relative humidity max. 80% must be observed in the buildings. When handling during storage, the dampers must be protected against mechanical damage.

The scope of delivery includes a complete damper and delivery note.

Warranty

The manufacturer provides a 24-month warranty on dampers from the shipment date.

The manufacturer's warranty for SEDM-L dampers completely expires after any unprofessional handling by untrained workers (see chapter Assembly). With the control device, disassembly of electrical elements, i.e. actuators, communication and power supply devices.

The warranty also expires when dampers are used for purposes, equipment and working conditions other than those permitted by these technical conditions or after mechanical damage during handling.

If the dampers are damaged by transport, it's necessary to draft a report with the courier upon acceptance for the possibility of a later complaint.

Assembly

- Assembly, maintenance and damper function check can be done only by qualified and trained person, i.e. "AUTHORIZED PERSON" according to the manufacturer documentation.
- All works done on the smoke control dampers must be done according international and local norms and laws.
- All effective safety standards and directives must be observed during damper assembly.
- To ensure reliable smoke exhaust damper function it is necessary to avoid blocking the closing mechanism and contact surfaces with collected dust, fibre and sticky materials and solvents.

Manual operation

Without power supply, the damper can be operated manually and fixed in any required position.

Electrical connection of the actuator in protection box

Drill two holes into the protection box (from outside to inside) and pull through field wiring cables (fire resistant cables) to connect actuator trailing lead. Protection box is made of calcium silicate plates.

Example of position of holes in the wall of the box, without pre-manufactured slot

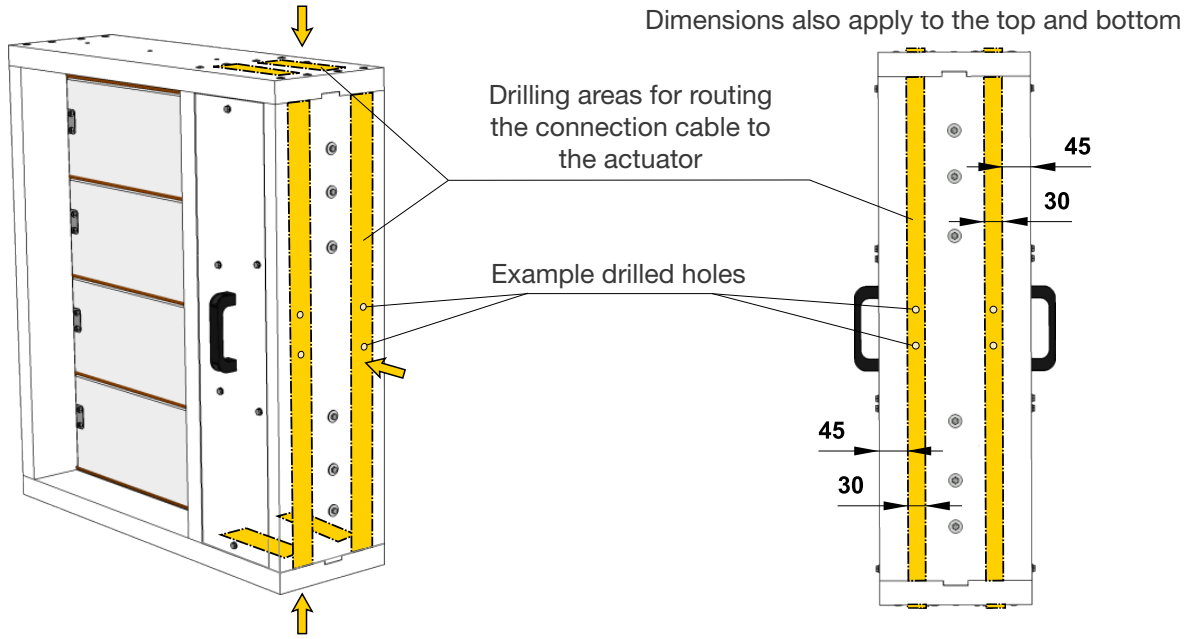

Procedure:

- Use drill (drill size acc. To suit connecting cable Ø + 2 mm for seal up by mastic) and make two holes.

It is possible to drill holes in any side of the housing.

- Pull the heat resistant cable through the calcium silicate plate (wall) and connect with cables from actuator acc. to above mentioned electrical diagram.
- Seal up the space around cable with fire resistant mastic (HILTI CFS-S ACR, PROMASTOP) or equivalent.

Entry into service and revision

- Prior to commissioning the dampers and during subsequent serviceability checks, all versions, including electrical component operation, must be inspected and functionally tested. After commissioning, serviceability checks must be performed at least twice annually. If no defect is found during two consecutive serviceability checks, then it's possible to perform serviceability checks once yearly.
- The results of regular inspections, deficiencies found and all-important facts concerning the dampers function must be entered in the "FIRE BOOK" and immediately reported to the operator.
- If, for any reason, the dampers are found unfit to perform their function, this must be clearly indicated. The operator is obliged to ensure that the damper is brought into a state where it will be able to perform its function again and during this time must provide fire protection in another sufficient way.

These checks must be carried out before the dampers are put into operation and during subsequent serviceability checks.

Visual inspection of the damper's correct installation, the damper's internal space, the damper slats, the bearing surfaces of the slats and the silicone seal.

Check the adjustment of the damper slat from the open position to the closed position and back.

Spare parts

Spare parts are only delivered on order.

Product Marking

SEDM-L A x B .44 / P1/P1

Type
SEDM-L = Fire damper

Size A x B

Design
.44 - with actuating mechanism BLE 230 (BE 230-12)
.54 - with actuating mechanism BLE 24 (BE 24-12)

Connections:
P1/P1 - 30 mm flange over slats
/M2/-/ - Grille RAL9003 on one side and the other side is without connecting flange
(–) - without flange and grille

Example: SEDM-L 200×430 .44/P1/P1 EI 120

Data label is placed on the damper casing:

MANDÍK®
MANDÍK, a.s.
Dobříšská 550, 267 24 Hostomice, Czech Republic

SMOKE EXTRACTION DAMPER MULTI-SLAT- MULTI SEDM-L			
DIMENSION:		ACTUATING SYSTEM:	
YEAR/SER.NO.:		WEIGHT (kg):	
FIRE PROTEC. CLASS: **EI 120 (Ved - i↔o) S1000CmodHOT 400/30MAmulti**			
TPM 146/20	Cert. No.: 1391-CPR-2021/0009, DoP: PM/SEDM-L/01/21/1	EN 12101-8:2011	CE 1391

MANUAL

ETS NORD

ETS NORD AS

Address: Peterburi tee 53
11415 Tallinn
Estonia

Phone: +372 680 7360

info@etsnord.ee
www.etsnord.ee

ETS NORD Finland

Address: Pakkasraitti 4
04360 Tuusula
Finland

Phone: +358 40 184 2842

info@etsnord.fi
www.etsnord.fi

ETS NORD Sweden

Address: Järsjögatan 7
692 35 Kumla
Sweden

Phone: +46 19 554 20 50

Address: Pinjegatan 5
213 63 Malmö
Sweden

Phone: +46 40 94 68 70

Address: Förrådsvägen 5
151 58 Södertälje
Sweden

Phone: +46 8 550 301 40

info@etsnord.se
www.etsnord.se

ETS NORD International

info@etsnord.com
www.etsnord.com

Let's move the air ***together!***