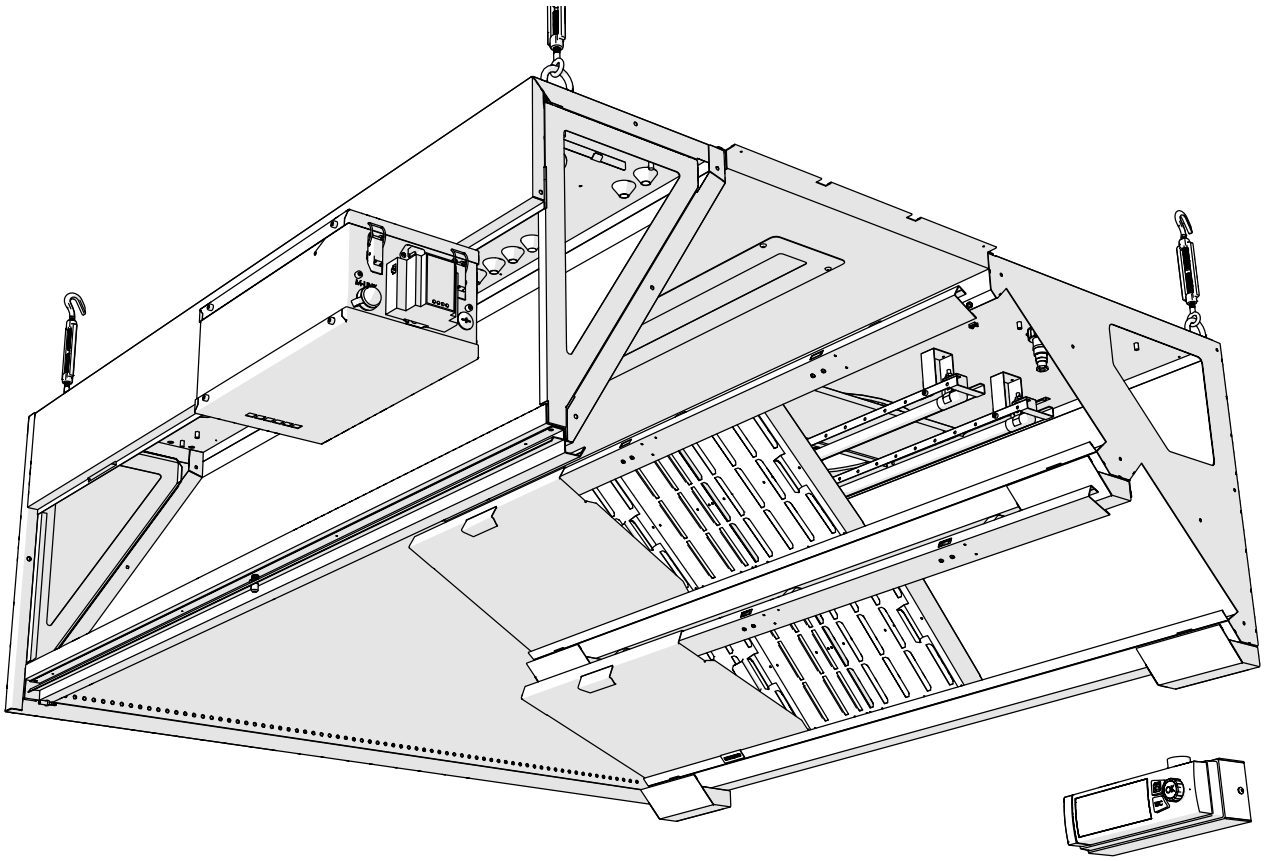

NORDcanopy

UV Integrated Cleaning System Maintenance and User Manual

ETS NORD

Contents

1. HV Grease Canopy Maintenance Instructions 4
1.1 Removing the HFK Grease Filters, Grease Cups and Shields 5
1.2 Reinstalling the HFK Grease Filters, Grease Cups and Shields 5
2. UV Lamp Maintenance Instructions 6
2.1 UV Lamp Maintenance 6
2.2 Replacing UV Lamp 6
3. Using the LCD Panel 8
3.1 Operating Principles of the UV Cleaning System 8
3.2 Menu View: NORDcanopy UV 8
3.3 Menu View: Alarms 11
3.4 Menu View: System Settings 12
4. LED Notification Panel 13

ETS NORD UV-cleaning system uses UV-C radiation to destroy grease particles in the canopy extraction chamber and in ducts. UV radiation is extremely dangerous to humans and the user should never look at ultraviolet radiation with the naked eye.

Facts about UV Radiation

UV radiation is radiation invisible to the eye, consisting of several sub-rays divided by wavelength. The most dangerous of these are VUV and UVC, which are blocked by the Earth's ozone layer. Only UVB and UVA can escape the ozone layer, the dangerous effects of which are manifested by prolonged exposure. In the case of UV radiation, according to EN 16282-8:2017, the maximum effective radiation intensity is:

- 0.5 mW/m^2 measured at 10 cm from the separator.

In Estonia, the limit of effective radiation intensity in the working environment is:

- 30 J/m^2 for 8 hours of exposure or 1 mW/m^2 in Annex 1 of VV Regulation No. 47.

Prolonged exposure to UV radiation can cause the following injuries:

- On the skin: irritation, burning sensation.
- In the eyes: irritation, burn, visual impairment.
- In the lungs: irritation of the respiratory tract, difficulty breathing.

Precautions must always be taken if UV radiation is detected indoors in one way or another.

Facts about Ozone

Ozone is a colorless gas whose sharp smell can be recognized by a person at a concentration of 0.02 ppm (0,4 mg/m^3). Ozone smells similarly to the chlorine used in swimming pools. When ozone is used, the current legislation must be observed. In Estonia, the following hygienic limits for ozone have been provided:

- 0,05...0,2 ppm (during working hours, 8 hours)
- 0,3 ppm (15 minutes)

Acute exposure to ozone can cause the following injuries:

- On the skin: irritation and burning sensation.
- In the eyes: severe irritation, burns and decreased vision.
- Lungs: irritation in the respiratory organs and breathing problems.

If ozone is detected indoors, precautions should be taken.

Warnings!



This device emits ultraviolet radiation and ozone!
Prolonged exposure to ozone and ultraviolet radiation can cause bodily injury.



When removing grease filters, make sure that the lamps are not on!



Risk of falling!
Make sure installation and service personnel have stable work platforms when installing the device.



Use protective glasses and gloves during installation and maintenance!



ALWAYS power off the system before any maintenance work!



Only original spare parts and UV lamps purchased from ETS NORD may be used in the UV cleaning system! UV lamps can be ordered from the sales office.

1. HV Grease Canopy Maintenance Instructions

The frequency of cleaning the canopy depends on its use and should be determined based on the intensity of kitchen use. To ensure the best hygiene, fire safety and functionality, it is important to maintain cleanliness in the entire kitchen, including the appliances located in the kitchen.

- All internal and external surfaces of the kitchen canopy, including light fixtures, are cleaned using neutral cleaning agents. Carefully rinse the surfaces after cleaning, to avoid harmful interactions of cleaning agents and high temperatures.
- To clean the exhaust chamber HFK filters and UV lamp(s) are removed from the kitchen canopy.
- To clean the supply chamber, the front panel of the kitchen canopy and control unit (if there is any) is removed.
- To clean the HFK grease filters, they are removed from the hood exhaust air chamber. Runoff grease is drained into the kitchen grease drain and filters are washed by hand, in a dishwasher or with steam. When cleaning filters, the same procedures are also performed on grease cups and protective shields.
- UV lamps should be inspected at least once a week for contamination. The soiled lamp is cleaned with a damp cloth. To clean a more heavily soiled lamp, 90-100% isopropyl alcohol should be used.
- **ATTENTION!** Do not use hard or abrasive detergents, chlorine or bleach when cleaning the canopy!
- **ATTENTION!** Never clean the kitchen canopy when any of its surfaces are hot or in use.
- **ATTENTION!** No water or moisture should enter the UV control unit.

**ATTENTION! When performing canopy maintenance,
you must always switch off the UV cleaning system from the LCD control panel.**

UV protective shields, HFK grease filters and grease cups can be washed by hand, in the dishwasher or steam cleaned.

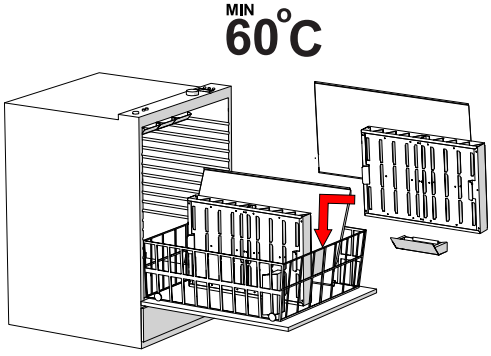

1.1 Removing the HFK Grease Filters, Grease Cups and Shields

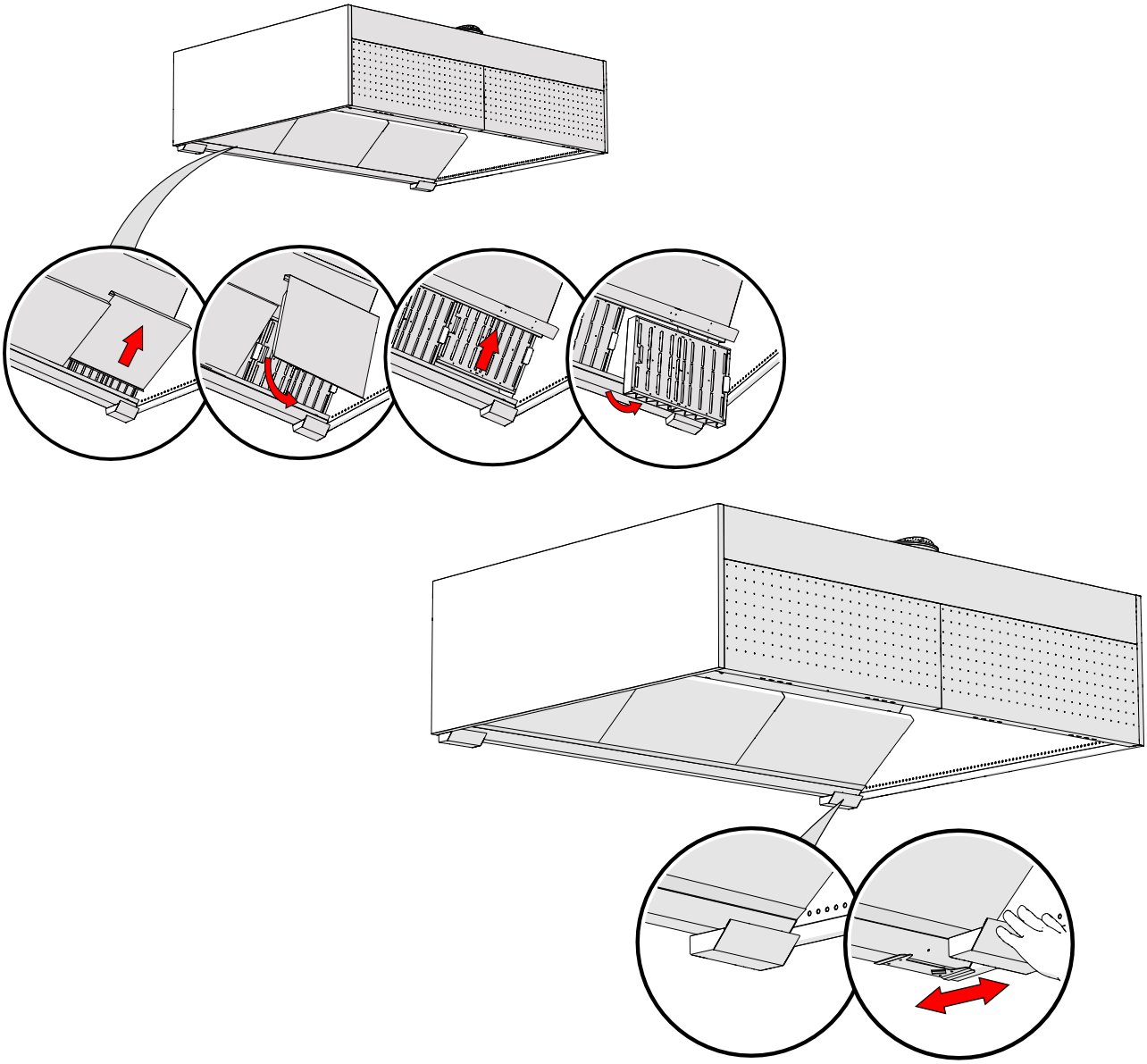

Danger of ultraviolet radiation!
Protective shields and grease filters must not be removed from a working system!

1.2 Reinstalling the HFK Grease Filters, Grease Cups and Shields

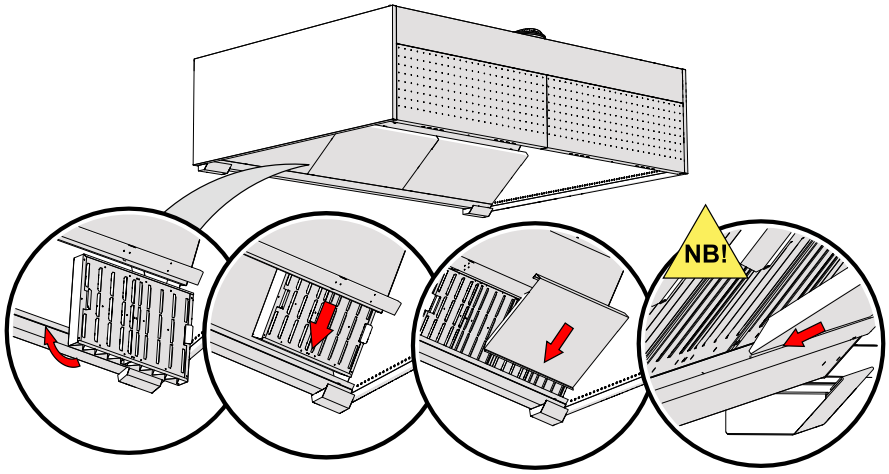

2. UV Lamp Maintenance Instructions

During maintenance and cleaning the system is turned off from the LCD panel. It is possible to check and clean the UV lamp without removing it from the mounting rail. The UV lamp must only be removed if the system is switched off and the UV control unit is disconnected from the mains!

2.1 UV Lamp Maintenance

NB! The surfaces of some of the low-pressure UV lamps can reach temperatures of up to 160°C. Allow it a cool down period of at least 10 minutes before touching it.

It is possible to check and clean the UV lamp without removing it from the mounting rail. After turning the system off from the LCD panel allow the lamp(s) to cool for at least 10 minutes. During cooling you can perform a visual inspection of the canopy, exhaust air chamber and the UV lamp(s).

The UV lamp(s) should be inspected at least once a week for contamination. The soiled lamp is cleaned with a damp cloth. To clean more heavily soiled lamps, use 90–100% isopropyl alcohol.

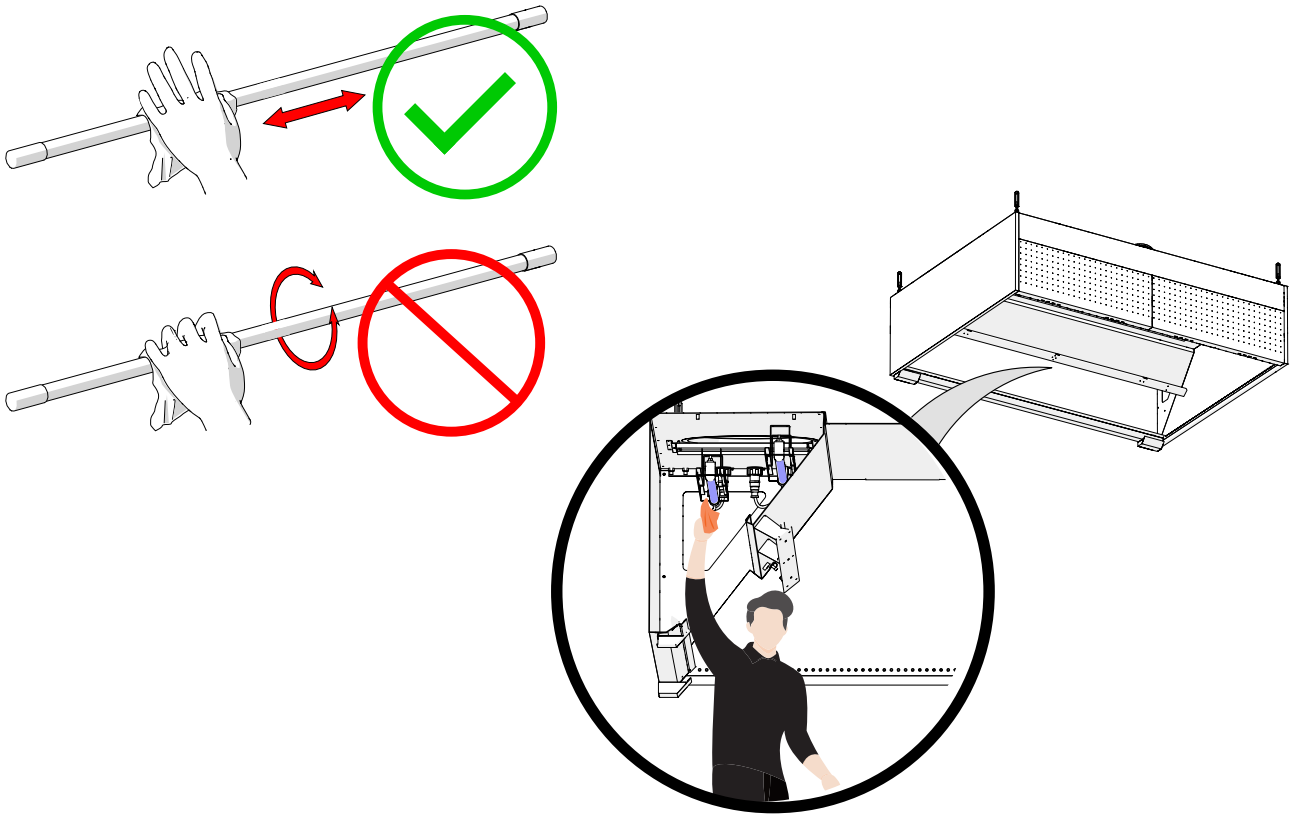

2.2 Replacing UV Lamp



Always turn off the system and disconnect the control unit from the mains before replacing the UV lamp. After turing off the power, let the UV lamp cool for 10 minutes after which it will be safe to handle.



Use protective glasses and gloves during installation and maintenance!



Risk of falling!

Make sure installation and service personnel have stable work platforms when installing the device.



Only original spare parts and UV lamps purchased from ETS NORD may be used in the UV cleaning system!

To remove the UV lamp from the canopy, disconnect the UV lamp from the power circuit by first turning the locking ring of the plug clockwise and then pulling the plug down.

Do not pull on the cable, but only on the plug.

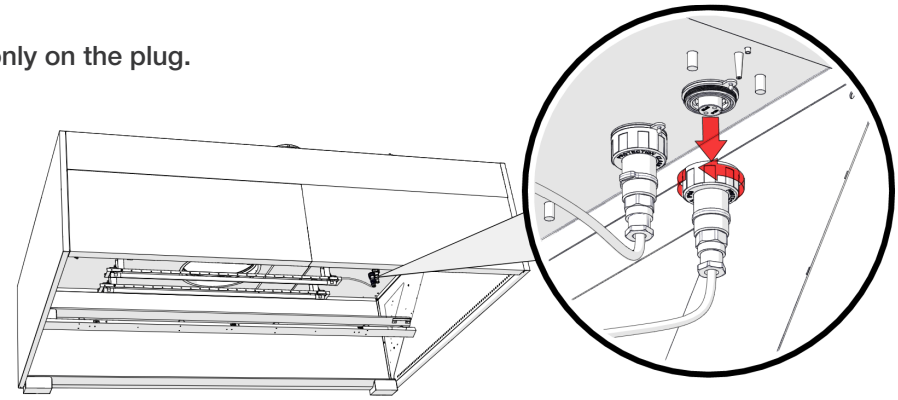

After disconnecting the UV lamp from the plug, screw the cap of the bulb onto the open socket on the ceiling. The protective cap hangs from the socket.

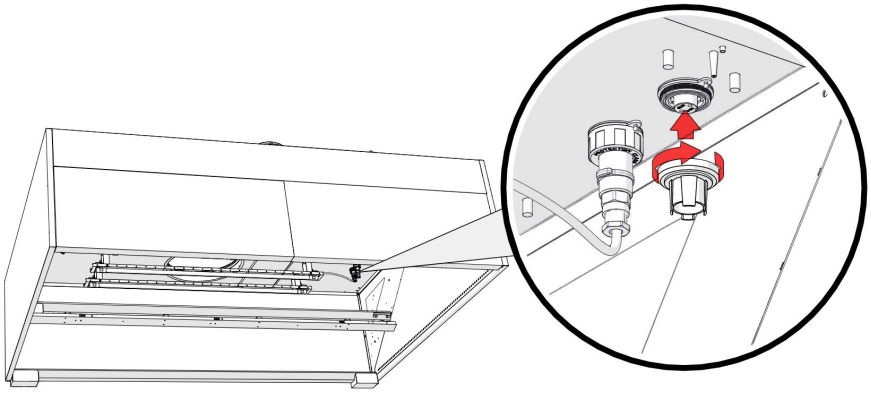

To remove the UV lamp from the canopy extraction chamber, open the lamp fixing clips by turning its screw fastener counterclockwise, and then carefully remove the UV lamp from the canopy extraction chamber.

Use protective glasses and gloves during maintenance!

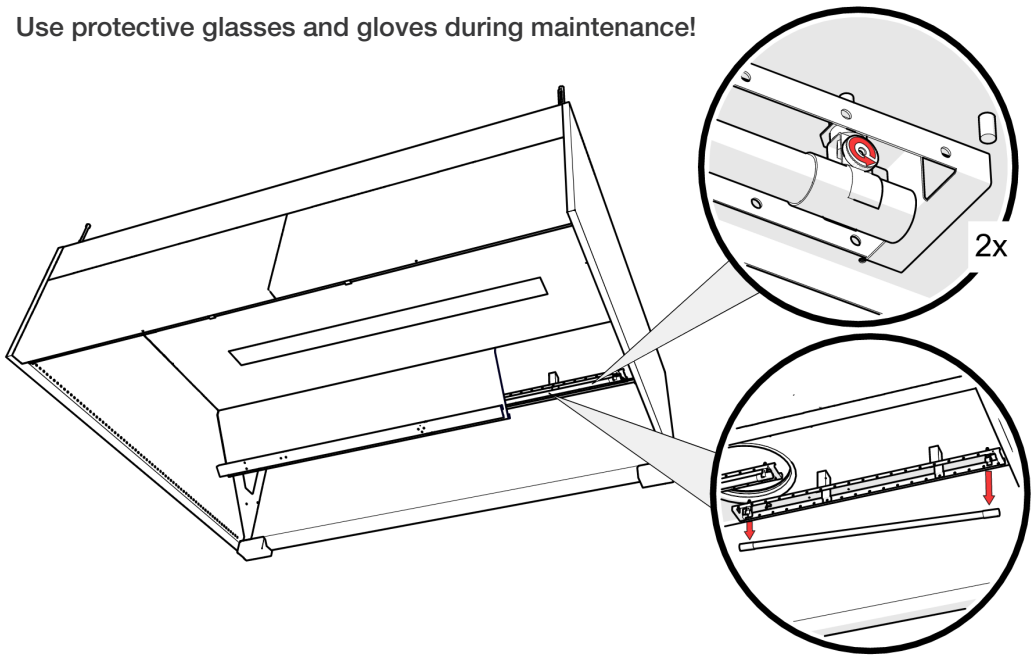

When the kitchen canopy has been serviced, the UV lamp and the UV control unit must be installed back into the canopy in the reverse order of how they were removed.

3. Using the LCD Panel

3.1 Operating Principles of the UV Cleaning System

The UV system operates normally when no alarms are active, depending on the severity of the alarm the system may stop working and require technician services. If there is a pressure drop in the system (below 20 Pa), you will be notified of this event by an alarm and the system continues working only when the pressure has risen again (above 20 Pa).

Icon	Description
	Indicates the ***NORDcanopy UV*** menu which is for controlling and monitoring of the UV-system.
	Indicates the ***Alarms*** menu which is for monitoring and handling the UV system alarms. This icon also indicates an active alarm.
	Indicates the ***System*** settings menu which is for configuration of UV system settings (time, date, language, etc.).
	Indicates that this menu or setting is meant for **ETS NORD technicians** and requires a service code for entry.

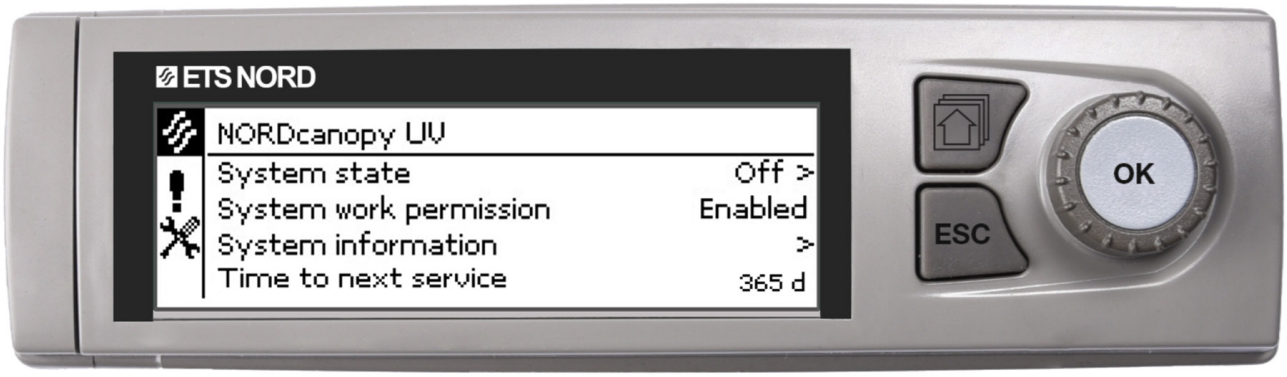

Button	Action
OK	Turn the button to navigate in the menu. Press the button to enter the menu and accept the changes.
ESC	Press the button to move back to the previous menu or to cancel changes. Holding the button down for a few seconds of time dims the background light and returns the panel to home menu view – ***NORDcanopy UV***.

3.2 Menu View: NORDcanopy UV

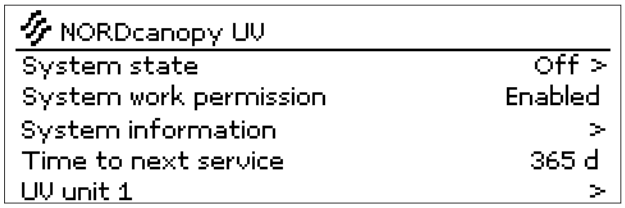

The current selected system operating mode will be displayed in ***System state***:	
Off	System is not working - lamps are turned off.
On	System is working - lamps are turned on.
Smart schedule	System starts automatically according to the schedule which is set by an ETS NORD technician in cooperation with the administrative specialist.

System work permission **- displays system work permission info. If the UV-system utilises this feature, if it's not used then this line in the menu is not displayed.**	
Enabled	UV-system has operation permission.
Disabled	UV-system does not have operation permission.

More detailed information that reflects the general state of the system will be displayed in *System information*:		
Operation status	*Working*	Indicates that the system is operational.
	Not working	Indicates that the system is not operational.
Critical error	*Normal*	Indicates that there is no critical error.
	Alarm	Indicates that there is a critical error in the system and needs immediate service technician actions.
Service status	*Normal*	Indicates that the system does not need service technician actions.
	Alarm	Indicates that the system does needs service technician actions.

Time to next service **- displays the no. of the days until maintenance, an alarm will be triggered when there is 0 days left. The UV-system has two types of maintenance alarms.**	
Service-A	Alarm is triggered when ***Time to next service*** has reached 0 days.
Service-B	Alarm is triggered when ***Lamp runtime*** has reached 10 000 hours.

Contact service@etsnord.com to agree on a maintenance time.

UV unit 1 **– containts two submenus which display detailed UV-system information.**

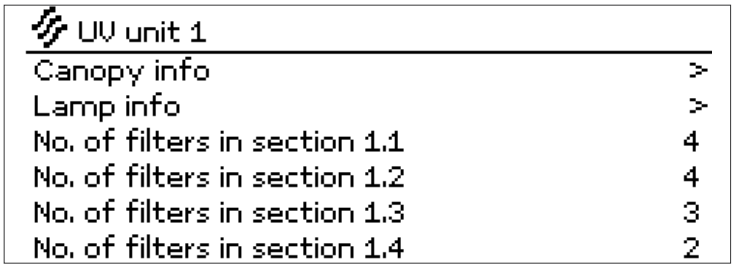

Canopy info	Displays canopy related information.
Lamp info	Displays UV lamp related information.
No. of filters in section x.x	Displays the number of grease filters in that particular canopy section. It is important to always make sure that after you have finished canopy maintenance the same amount of grease filters is put back to the section for this directly affects the exhaust airflow calculation.

Info	Safety	Pressure	l/s
1.1	Okay	45Pa	111
1.2	Okay	45Pa	111
1.3	Okay	50Pa	117
1.4	Okay	50Pa	117

Info	Depending on the canopy build and configuration the UV-system may contain up to 4 safety switches and pressure sensors.
Safety	Displays the state of the safety switch: ***Okay*** - means that the cover plates are installed and in place. ***Not okay*** - means that the cover plates are not installed and in place.
Pressure	Displays the negative pressure value (**must be at least 20 Pa**) in the extraction chamber of the canopy.
l/s	Displays the calculation of the exhaust airflows in the canopy chamber.

Lamp info	State	Runtime	Fault
Lamp 1	Off	5000h	No
Lamp 2	Off	5000h	No
Lamp 3	Off	5000h	No
Lamp 4	Off	5000h	No

Lamp info	Depending on the canopy build and configuration the UV-system may contain up to 4 lamps.
Safety	Displays whether the lamp is ***On*** or ***Off***.
Pressure	Displays the working time of the lamp in hours i.e., the total number of hours that the lamp has been in the ***On*** state. It is important from time to time to check the lamp's runtime value, because at 10 000 hours the lamp must be replaced. The system itself also has a notification alarm when this event occurs.
Fault	Displays whether the lamp is experiencing a fault (***Yes***) or not (***No***).

Multiple UV Canopies System

If you have several UV canopies in your kitchen, turning the system ***On/Off*** is still done from the ***NORDcanopy UV*** menu under ***System state*** - it turns all the devices on and off. But the additional canopies are referenced as UV unit **X** in the menu.

NORDcanopy UV	
System state	Off >
System work permission	Enabled
System information	>
Time to next service	365 d
UV unit 1	>
UV unit 2	>
UV unit 3	>
UV unit 4	>
UV unit 5	>
UV unit 6	>

3.3 Menu View: Alarms

You can check the active alarms and what alarms have been active.



The number of active alarms is shown in the right corner of the main view.



Every active alarm is shown in a separate row, where you can see when the alarm has become active. An exclamation (!) mark in front of the date shows that the alarm has been silenced by pressing ***ESC*** button. Pressing the **OK** button will give you more information about the alarm.



The last 10 alarms can be seen in alarm history.

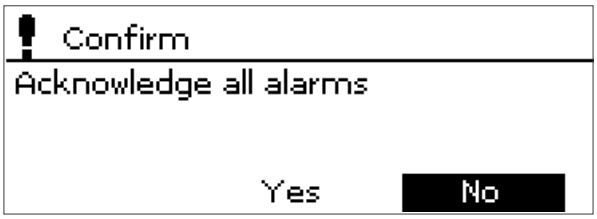

Before acknowledging all alarms, confirmation is requested.

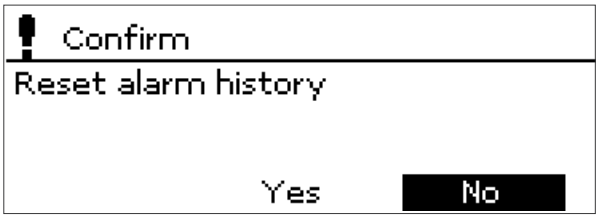

Before deleting alarm history, confirmation is requested.

Allows you to remove the alarm sound.

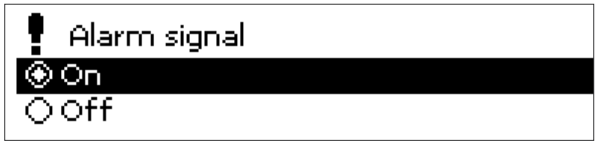

1. Turn the ***OK*** button change the value and press ***OK*** button to accept.
2. Press ***ESC*** button to cancel and exit if needed.

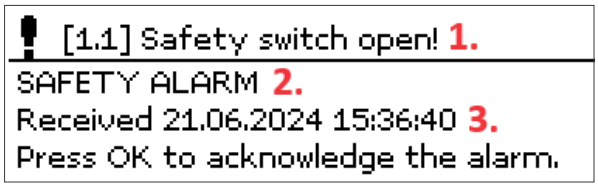

1. The heading of the alarm view shows the reason for the alarm.
2. Alarm body always has a notification message in English.
3. The time when the alarm was activated.

3.4 Menu View: System Settings

It is important that the time and date are correct. Alarm information, for instance, shows when an alarm has been activated and inactivated. It is highly recommended to ensure that the time and date are correct. The device clock takes daylight savings and leap years into account automatically.



1. Set the hours and press ***OK*** button to accept.
2. Set the minutes and press ***OK*** button to accept.
3. Press ***ESC*** button to cancel and exit if needed.

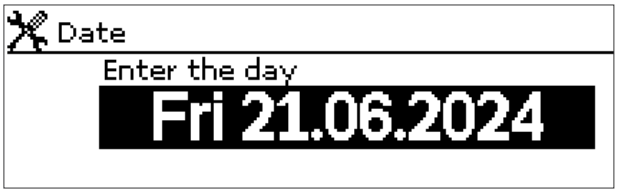

1. Set day and press ***OK*** button to accept (name of weekday is updated automatically).
2. Set month and press ***OK*** button to accept.
3. Set year and press ***OK*** button to accept.
4. Press ***ESC*** button to cancel and exit if needed.

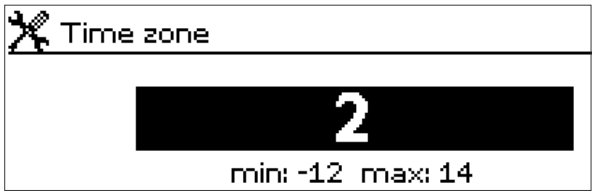



1. Turn the ***OK*** button change the value.
2. Press ***OK*** button to accept.
3. Press ***ESC*** button to cancel and exit if needed.



4. LED Notification Panel

The LED notification panel is an optional accessory and is not part of the main UV cleaning system.

The LED notification panel is designed to visually convey to the user in a simplified manner the status of the UV cleaning system.

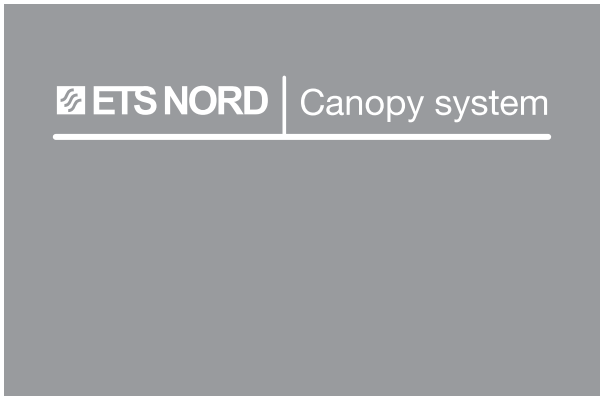

When **“ETS NORD Canopy system”** is lit the system is operating normally.



When **“ETS NORD Canopy system”** and **“Call service”** are lit then the system is operating but requires maintenance.



When **“ETS NORD Canopy system”** is lit and **“Call service”** is lit in red, then the system is operating but requires immediate maintenance.



When only the **“Call service”** is lit in red then the system is no longer operating and is experiencing a critical error and needs immediate maintenance service.

ETS NORD

ETS NORD AS

Address: Peterburi tee 53
11415 Tallinn
Estonia

Phone: +372 680 7360

info@etsnord.ee
www.etsnord.ee

ETS NORD Finland

Address: Pakkasraitti 4
04360 Tuusula
Finland

Phone: +358 401 842 842

info@etsnord.fi
www.etsnord.fi

ETS NORD Sweden

Address: Järsjögatan 7
69235 Kumla
Sweden

Phone: +46 19 554 20 50

info@etsnord.se
www.etsnord.se

ETS NORD International

info@etsnord.com
www.etsnord.com

ETS NORD Ventilation Manufacturing LLC UAE

Address: Dubai Industrial City
Phase 3, Dubai

Phone: +971 5257 02916

sepin.rayo@etsnord.com

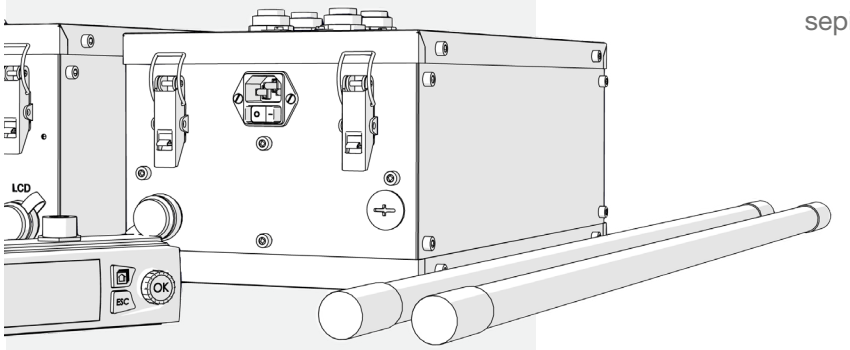

Let's move the air ***together!***